WVP80080F50A

DC - 8.0GHz 80W GaN Amplifier

Features

- Frequency Range : DC – 8.0 GHz
- Psat : 49.0 dBm
- Power Gain: 11 dB @Psat
- Small Signal Gain: 18 dB
- DE: 40% @Psat
- Bias : V_D = 50V, I_{DQ} = 400mA, V_G = -2.5V (Typ.)
- Characterized at Pulse duty 10%, Pulse width 100uS

Product Image



- Package Type : SCN-BG2
- Package Dimensions: 9.20 x 10.80 x 2.08 mm

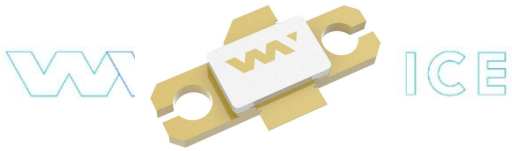

- Package Type : SCF-BG2
- Package Dimensions: 20.30 x 10.80 x 2.08 mm

Description

Wavice's WVP80080F50A is a high power, C-Band amplifier fabricated on Wavice's Durable 0.3um GaN on SiC process. Covering the frequency range of DC to 8.0GHz, the WVP80080F50A typically provides 49.0 dBm of saturated output power and 11 dB of saturated power gain while achieving 40% Drain efficiency.
The WVP80080F50A is ideal for use in both commercial and military radar systems.

ROHS compliant.

Applications

- Military Radar
- Commercial Radar
- Infra Structure
- Small Cell
- Jamming System

Ordering information

Part No.	Description
WVP80080F50A	SCF-BG2
WVP80080E50A	SCN-BG2
WVP80080E50AEV	WVP80080E50A Evaluation Board
WVP80080F50AEV	WVP80080F50A Evaluation Board

WVP80080F50A

DC - 8.0GHz 80W GaN Amplifier

Absolute Maximum Ratings

Parameter	Symbol	Value / Range
Drain Source Voltage	V_{DS}	55 V
Gate Source Voltage	V_{GS}	-10 to +2 V
Maximum Forward Gate Current	I_{GMAX}	12 mA
Absolute Maximum Channel Temperature	T_{CH}	+250 ℃
Storage Temperature	T_{STG}	-65 ℃ to +150 ℃
Mounting Temperature		245 ℃ / 30 sec

1) Case temperature T_C =25 ℃
2) Wavice does not recommend sustained operation above maximum operating conditions.
3) Exceeding any one or a combination of the Absolute Maximum Rating conditions may cause permanent damage to the device. Extended application of Absolute Maximum Rating conditions to the device may reduce device reliability.

Recommended Operating Conditions

Parameter	Symbol	Value / Range
Drain Source Voltage	V_{DS}	50 V
Drain Current	I_{DQ}	400 mA
Gate Source Voltage (Typical)	V_{GS}	-2.5 V
Case Operating Temperature		~40 ℃ to +85 ℃

1) Electrical specifications are measured at specified test conditions. Specifications are not guaranteed over all recommended operating conditions.
2) Proper ESD(electrostatic discharge) control techniques should be used when handling these devices.

Thermal Characteristics

Parameter	Symbol	Units	Value	Test Conditions
Thermal Resistance using Infrared Measurement of Die Surface Temperature	R_{θ}(IR)	℃/W	2.79	Tbase = 85°C, V_D = 50V, I_{DQ} = 400mA, Freq = 5.5GHz
Peak IR Surface Temperature	T_{CH}	℃	143.3	

1) Thermal resistance determined to the case temperature (85 ℃)
2) Channel temperature indicated is an IR scan equivalent temperature, Thermal resistance is calculated using this value.

WVP80080F50A

DC - 8.0GHz 80W GaN Amplifier

Electrical Specifications

Parameter	Units	Min	Typ	Max
Saturated Output Power [1)]	dBm		49.0	
Drain Efficiency	%		40	
Power Gain @ Psat	dB		11	
Small Signal Gain	dB		18	
Input Return Loss	dB		-5	

Test conditions, unless otherwise noted :

- TA = 25 °C, V_D = 50V, I_{DQ} = 400mA, V_G = -2.5V(Typ.)
- Test Frequency : 5.5GHz
- Measured in WVP80080F50A Evaluation Board

1) Period 1msec / width 100usec, Duty 10%

Parameter	Units	Min	Typ	Max	Test Conditions
Gate Threshold Voltage	V	-3.8	-2.7	-2.0	V_{DS}= 10V, I_D= 12.0 mA
Drain-Source Breakdown Voltage	V	150			V_{GS}= -8V, I_D= 12.0 mA
Drain Current(I_{DMAX})[1)]	A	10.2	11.5		V_{DS}= 10V, V_{GS}= 2.0V
Gate Forward Voltage	V		2		I_{GS}= 12.0 mA

Test conditions, unless otherwise noted :

1) Scaled from PCM unit cell

WVP80080F50A

DC - 8.0GHz 80W GaN Amplifier

Performance Plots | S-Parameter

Test conditions, unless otherwise noted: T = +25 °C, V_D = 50 V, I_{DQ} = 400 mA

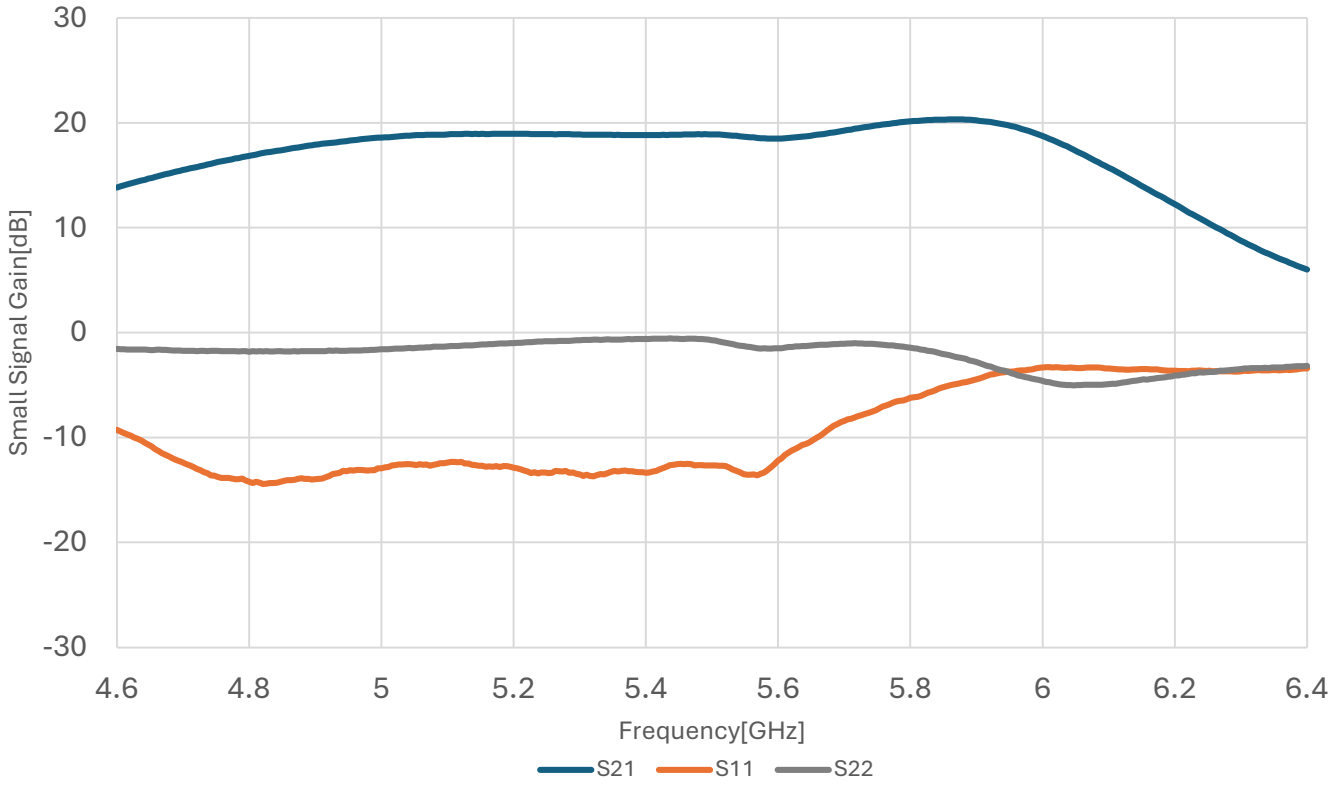

WVP80080F50A

DC - 8.0GHz 80W GaN Amplifier

Performance Plots | Peak Power / DE vs Input Power

Test conditions, unless otherwise noted: T = +25 °C, V_D = 50 V, Pulse Width = 100usec, Duty Cycle = 10%

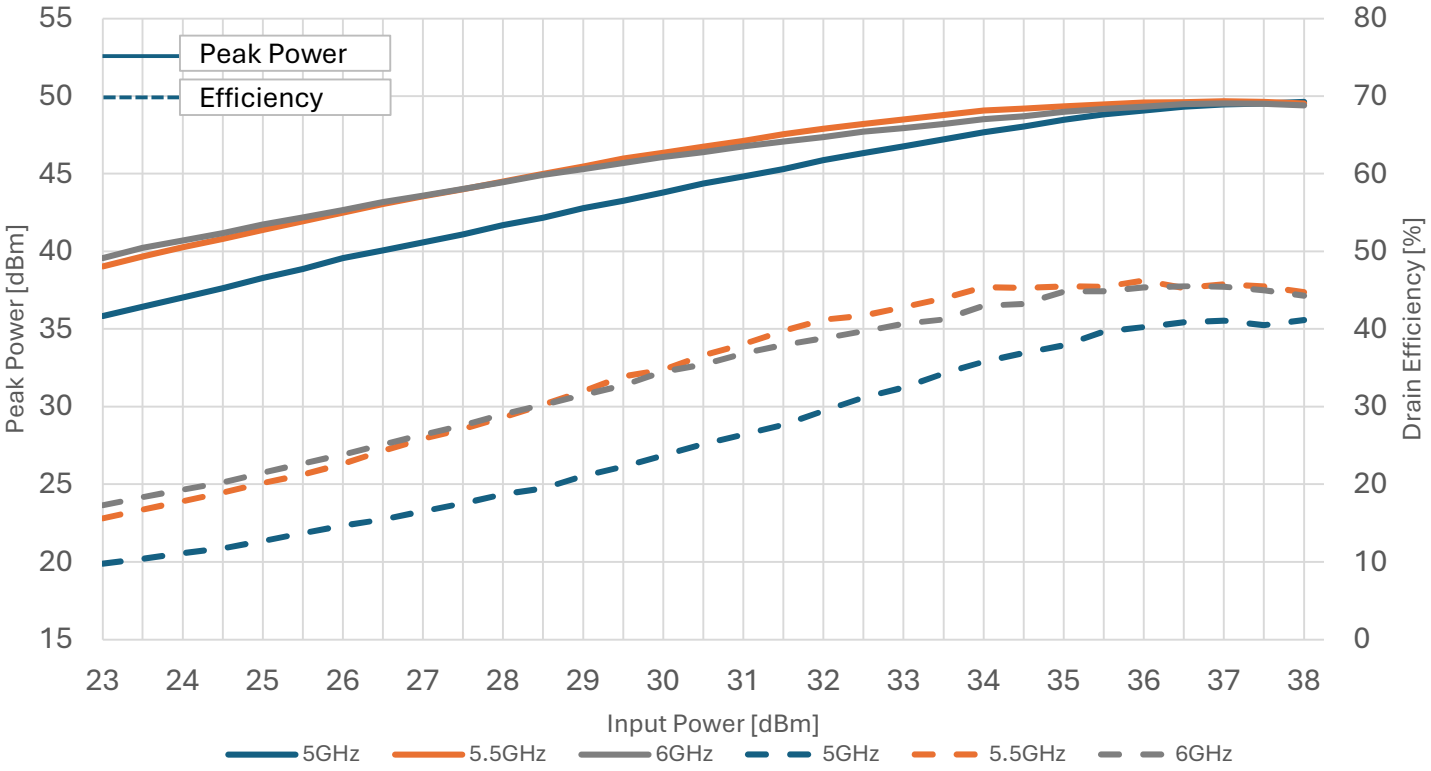

Performance Plots | Power Gain vs Input Power

Test conditions, unless otherwise noted: T = +25 °C, V_D = 50 V, Pulse Width = 100usec, Duty Cycle = 10%

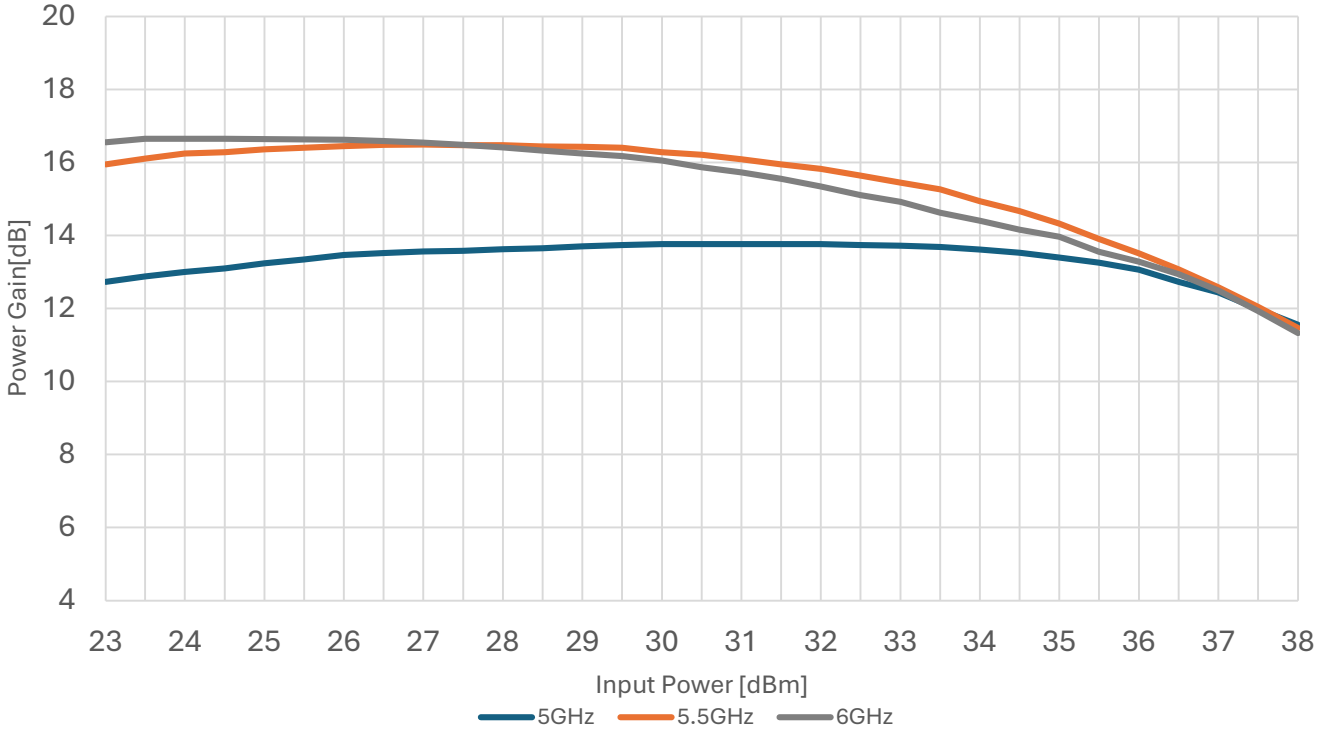

WVP80080F50A

DC - 8.0GHz 80W GaN Amplifier

Package Dimensions

Notes:

1. All dimensions are in millimeters.
2. Dimension tolerance is ± 0.025 mm, unless noted otherwise.

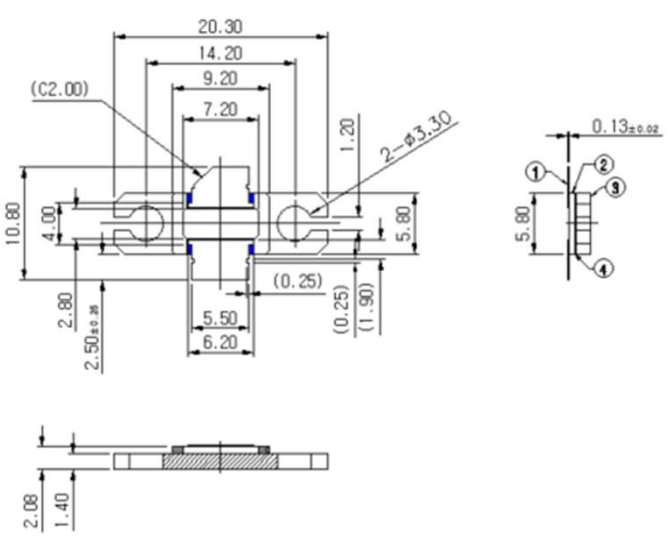

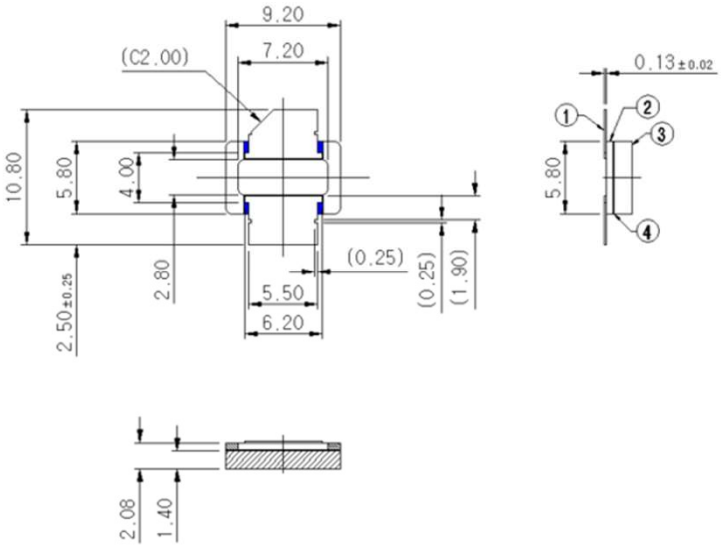

GATE

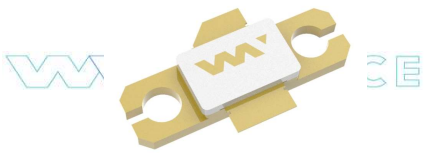

DRAIN

GATE



DRAIN

WVP80080F50A

DC - 8.0GHz 80W GaN Amplifier

Evaluation Board

Notes:

1. Evaluation Board Size 90 X 80 [mm]

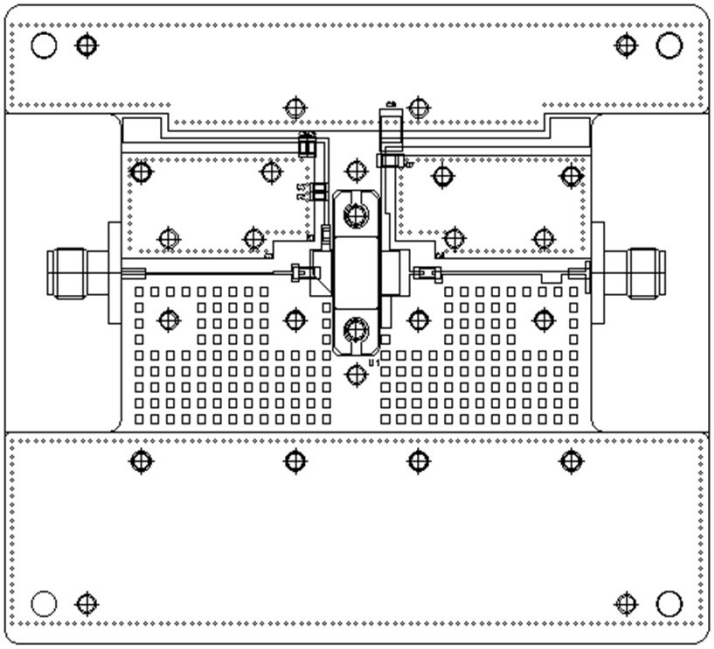

Bill of Materials

Reference Designator	Value	Description
C1	0.9pF	201 HQ CAP, 200V
C2	3pF	0603 Chip CAP, 50V
C3	10pF	0603 Chip CAP, 50V
C4	1nF	0603 Chip CAP, 50V
C5	4.7uF	0603 Chip CAP, 50V
C6	0.9pF	201 HQ CAP, 200V
C7	3pF	201 HQ CAP, 200V
C8	10uF	MLCC CAP, 10uF, 100V
R1	10 ohm	0603 Chip Res, ±5%
U1	50W	Wavice GaN Transistor
PCB Information	RO4350B, 20mil, 1oz	

WVP80080F50A

DC - 8.0GHz 80W GaN Amplifier

Applications Information

Notes:

1. Evaluation Board Schematic

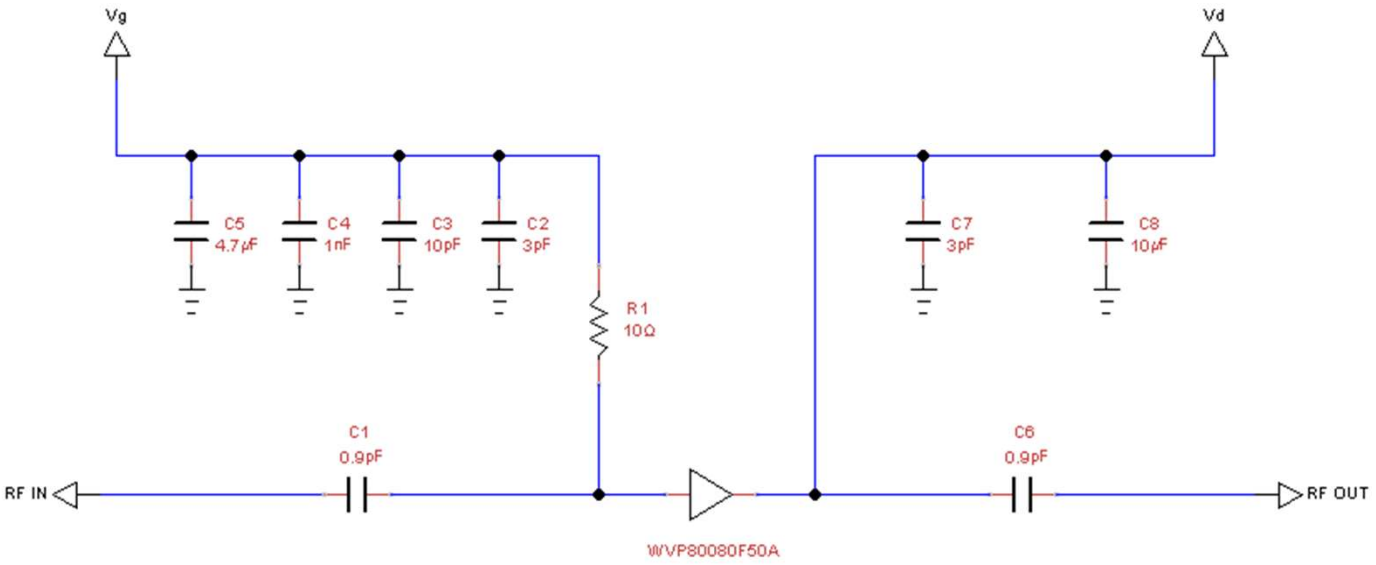

Bias-Up & Down Procedure

Procedure	Description
Bias-Up	1. Set I_D limit to 5000 mA, I_G limit to 20 mA
	2. Set V_G to −4.0 V
	3. Set V_D +50 V
	4. Adjust V_G more positive until I_{DQ}
	5. Apply RF signal

Bias-Down	1. Turn off RF signal
	2. Reduce V_G to −4.0 V. Ensure I_{DQ} ~ 0 mA
	3. Set V_D to 0
	4. Turn off V_D supply
	5. Turn off V_G supply

WVP80080F50A

DC - 8.0GHz 80W GaN Amplifier

Handling Precautions

Parameter	Class	Test Methodology
ESD – Human Body Model (HBM)	Class 1B	JEDEC JESD22 A114-D
ESD – Charged Device Model (CDM)	Class IV	JEDEC JESD22 C101-C
MSL – Moisture Sensitivity Level	N/A	IPC/JEDEC Standard J-STD-020

Solderability

The component leads should be manually soldered, and the package cannot be subjected to conventional reflow processes. The use of no-clean solder to avoid washing after soldering is recommended.

Contact Information

- Web : www.wavice.com
- Tel : +82-31-260-8600
- Email : sales@wavice.com

Notes & Disclaimer

Specifications are subject to change without notice. Wavice Inc. believes the information contained within this data sheet to be accurate and reliable. However, no responsibility is assumed by Wavice for any infringement of patents or other rights of third parties which may result from its use. No license is granted by implication or otherwise under any patent or patent rights of Wavice. Wavice makes no warranty, representation or guarantee regarding the suitability of its products for any particular purpose.

“Typical” parameters are the average values expected by Wavice in large quantities and are provided for information purposes only. These values can and do vary in different applications and actual performance can vary over time. Customers should obtain and verify the latest relevant information before placing orders for Wavice products. All operating parameters should be validated by customer’s technical experts for each application.

Wavice products are not designed, intended or authorized for use as critical components in life-saving, or life-sustaining applications or other applications in which the failure of Wavice product could result in severe personal injury or death or in applications for planning, construction, maintenance or direct operation of a nuclear facility.

Copyright © 2017- 2024 Wavice Inc. All rights reserved. The information in this document is subject to change without notice.