WGB01006020F-LV3

1.0GHz - 6.0GHz 20W GaN Amplifier

Features

- Frequency Range : 1.0GHz - 6.0GHz
- Psat : 43dBm (Min.)
- Power Gain : 6dB @Psat (Min.)
- Small Signal Gain : 10dB (Min.)
- Drain Efficiency: 15% @Psat (Min.)
- Bias : V_D = 28V, I_{DQ} = 500mA, V_G = -2.5V (Typ.)
- Characterized at CW

Product Image

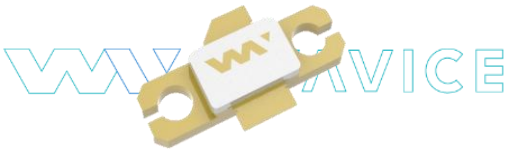

- Package Type : SCN-BG2

Description

Wavice's WGB01006020F-LV3 is a high power, Broad Band amplifier fabricated on Wavice's Durable 0.3um GaN on SiC process. Covering the frequency range of 1.0GHz - 6.0GHz, the WGB01006020F-LV3 typically provides 43dBm of saturated output power and 6dB of power gain while achieving 15% drain efficiency.
The WGB01006020F-LV3 is ideal for use in both commercial and military radar systems.

ROHS compliant.

Applications

- Military Radar
- Commercial Radar
- Infra Structure
- Small Cell

Ordering information

Part No.	Description
WGB01006020F-LV3	SCF-BG2
WGB01006020F-LV3EV	Evaluation Board Jig

㈜웨이비스 Unauthorized Copying and Distribution Forbidden

WGB01006020F-LV3

1.0GHz - 6.0GHz 20W GaN Amplifier

Absolute Maximum Ratings

Parameter	Symbol	Value / Range
Drain Source Voltage	V_{DS}	55 V
Gate Source Voltage	V_{GS}	-10 to +2 V
Maximum Forward Gate Current	I_{GMAX}	14 mA
Absolute Maximum Channel Temperature	T_{CH}	+250 ℃
Storage Temperature	T_{STG}	-65 ℃ to +150 ℃
Mounting Temperature		245 ℃ / 30 sec

1) Case temperature T_C =25 ℃
2) Wavice does not recommend sustained operation above maximum operating conditions.
3) Exceeding any one or a combination of the Absolute Maximum Rating conditions may cause permanent damage to the device. Extended application of Absolute Maximum Rating conditions to the device may reduce device reliability.

Recommended Operating Conditions

Parameter	Symbol	Value / Range
Drain Source Voltage	V_{DS}	28V
Drain Current	I_{DQ}	500mA
Gate Source Voltage (Typical)	V_{GS}	-2.5V

1) Electrical specifications are measured at specified test conditions. Specifications are not guaranteed over all recommended operating conditions.
2) Proper ESD(electrostatic discharge) control techniques should be used when handling these devices.

Thermal Characteristics

Parameter	Symbol	Units	Value	Test Conditions
Thermal Resistance using Infrared Measurement of Die Surface Temperature	R_{θ}(IR)	℃/W	1.86	Tbase = 85°C, P_{diss} = 60.5W Characterized at CW
Peak IR Surface Temperature	T_{CH}	℃	197.8	

1) Thermal resistance determined to the case temperature (85 ℃)
2) Channel temperature indicated is an IR scan equivalent temperature, Thermal resistance is calculated using this value.

㈜웨이비스 Unauthorized Copying and Distribution Forbidden

WGB01006020F-LV3

1.0GHz - 6.0GHz 20W GaN Amplifier

Electrical Specifications

Parameter	Units	Min	Typ	Max
Saturated Output Power [1)]	dBm	43		
Power Gain	dB	6		
Drain Efficiency	%	15		
Small Signal Gain	dB	10		

Test conditions, unless otherwise noted :

- TA = 25 °C, V_D = 28V, I_{DQ} = 500mA, V_G = -2.5V (Typ.)
- Test Frequency : 2.0GHz - 6.0GHz
- Measured in WGB01006020F-LV3 Evaluation Board

1) Characterized at CW

Parameter	Units	Min	Typ	Max	Test Conditions
Gate Threshold Voltage	V	-3.4	-2.7	-2.0	V_{DS}= 10V, I_D= 14mA
Drain-Source Breakdown Voltage	V	150			V_{GS}= -8V, I_D= 14mA
Drain Current(I_{DMAX})[1)]	A	11.9	13.4		V_{DS}= 10V, V_{GS}= 2.0V
Gate Forward Voltage	V		2		I_{GS}= 14mA

Test conditions, unless otherwise noted :

1) Scaled from PCM unit cell

㈜웨이비스 Unauthorized Copying and Distribution Forbidden

WGB01006020F-LV3

1.0GHz - 6.0GHz 20W GaN Amplifier

Performance Plots |

Test conditions, unless otherwise noted : T = +25 °C, V_D = 28V, I_{DQ} = 500mA

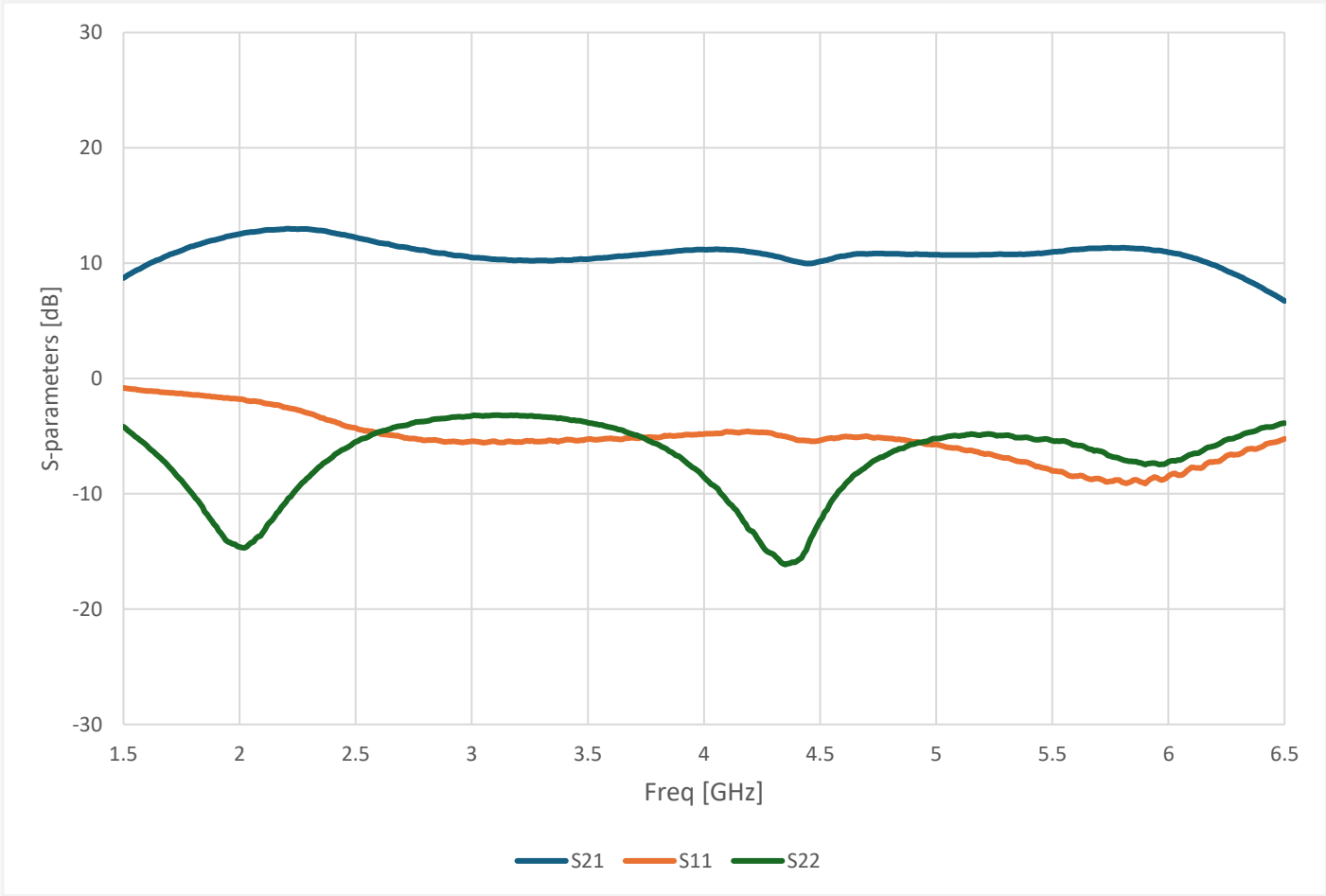

㈜웨이비스 Unauthorized Copying and Distribution Forbidden WVQ-0803-18 Rev.B

WGB01006020F-LV3

1.0GHz - 6.0GHz 20W GaN Amplifier

Performance Plots | Output Power vs Input Power

Test conditions, unless otherwise noted : T = +25 °C, V_D = 28V, I_{DQ} = 500mA, Characterized at CW

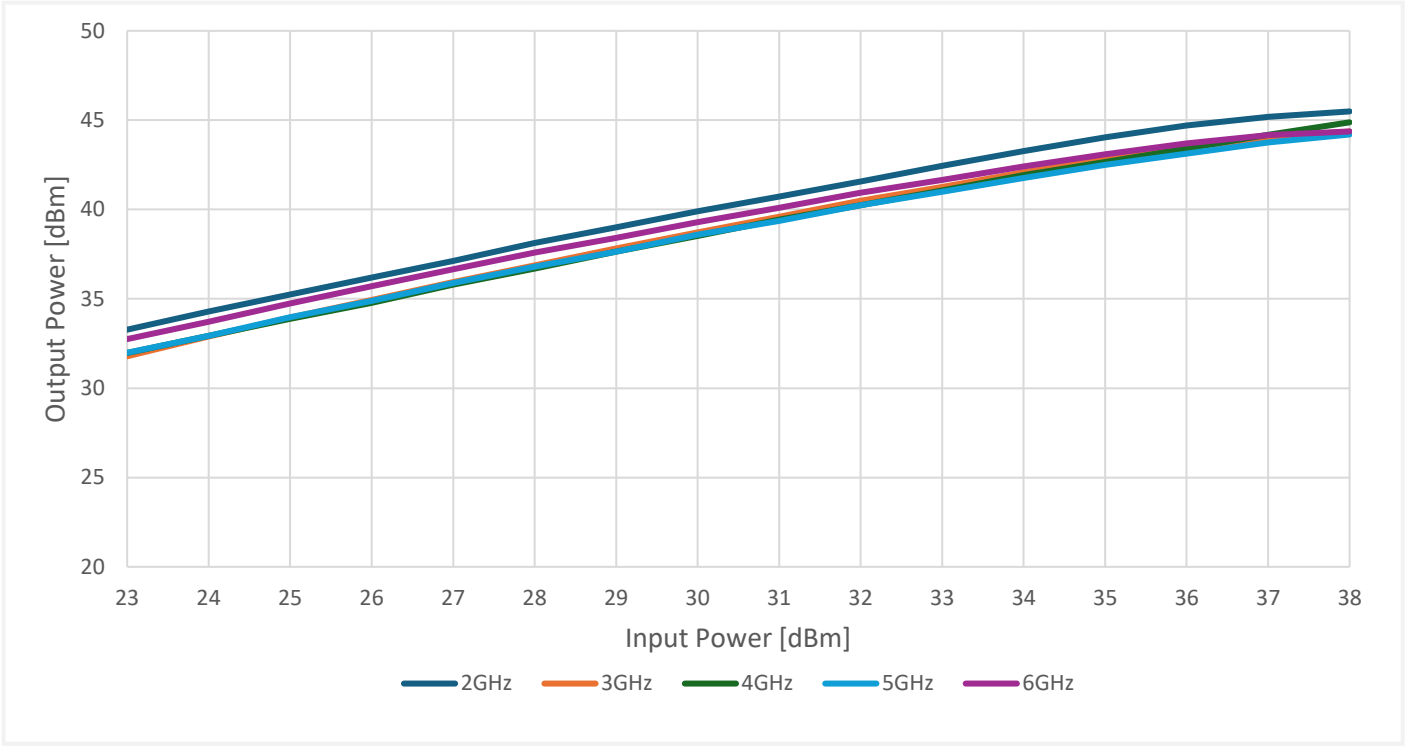

Performance Plots | Power Gain vs Input Power

Test conditions, unless otherwise noted : T = +25 °C, V_D = 28V, I_{DQ} = 500mA, Characterized at CW

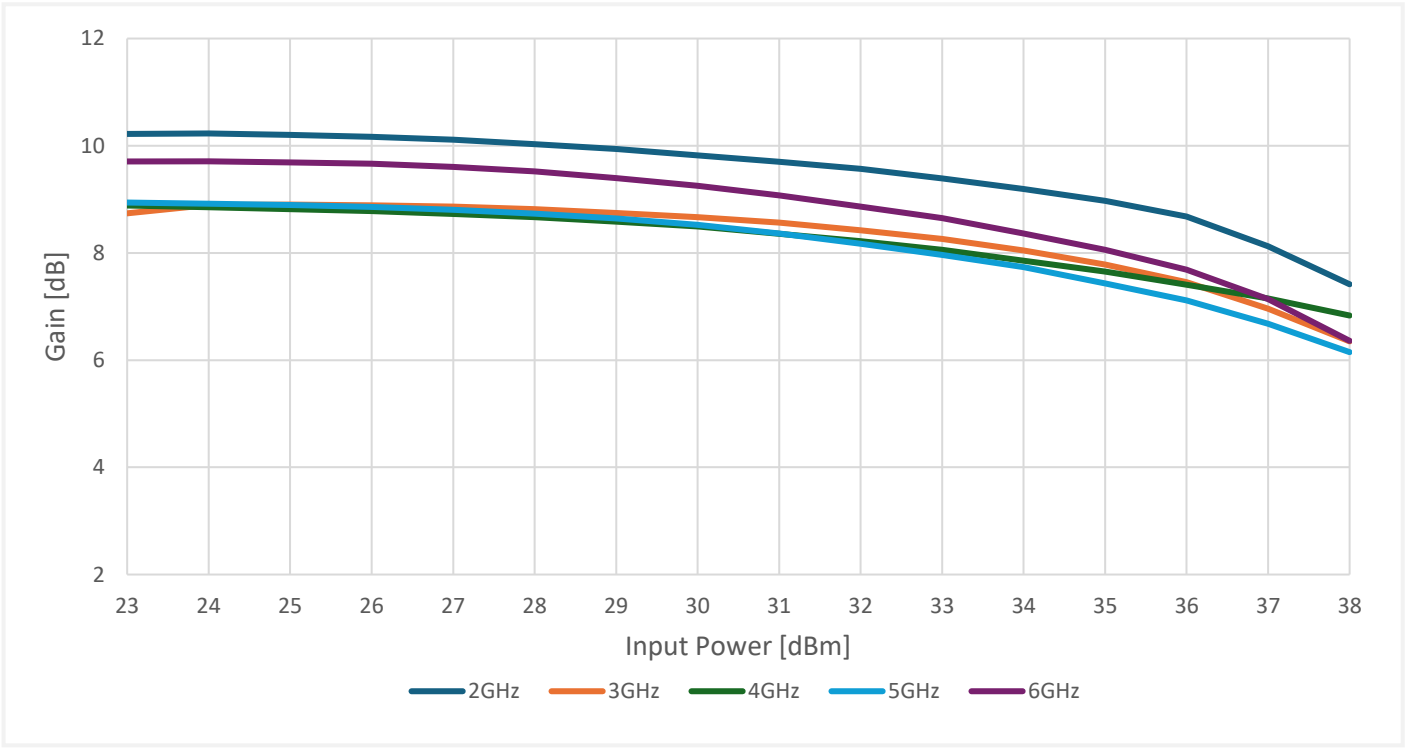

㈜웨이비스 Unauthorized Copying and Distribution Forbidden WVQ-0803-18 Rev.B

WGB01006020F-LV3

1.0GHz - 6.0GHz 20W GaN Amplifier

Performance Plots | Drain Efficiency vs Input Power

Test conditions, unless otherwise noted : T = +25 °C, V_D = 28V, I_{DQ} = 500mA, Characterized at CW

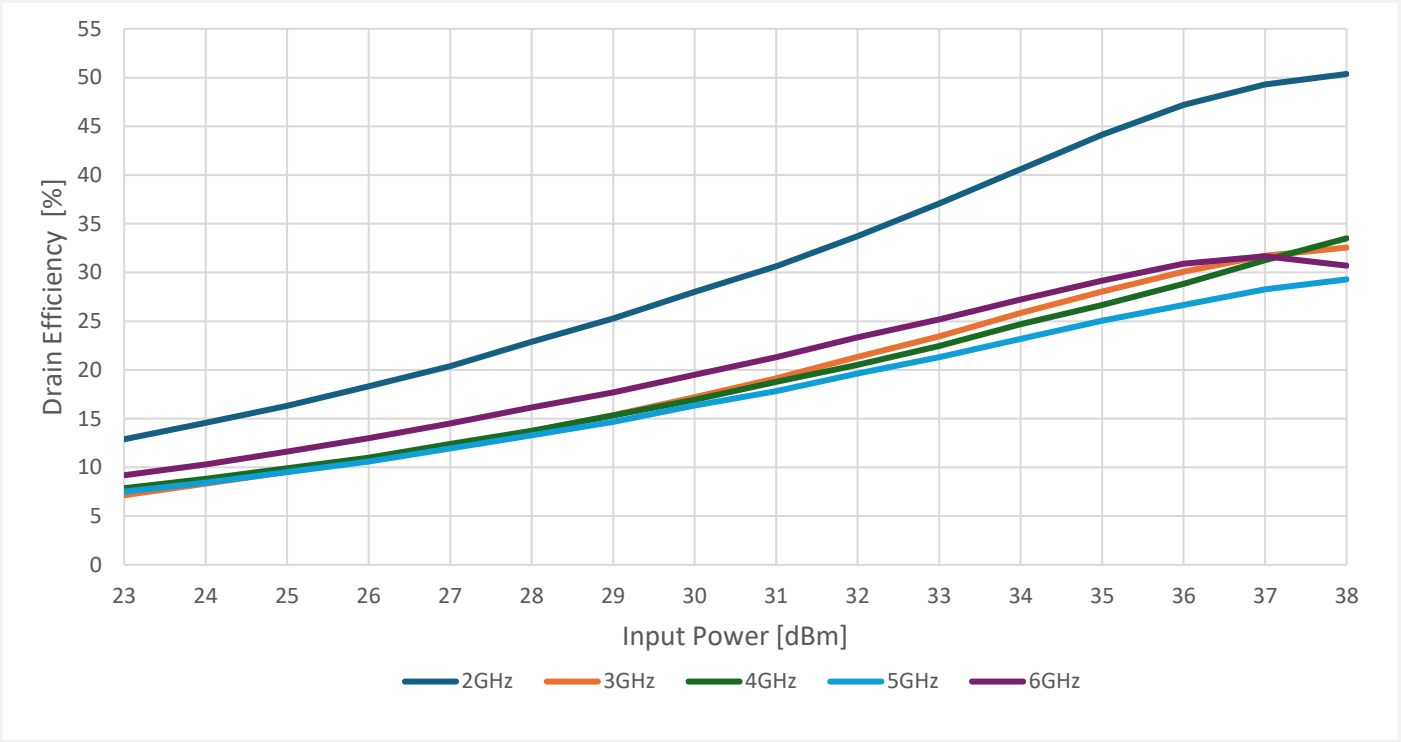

Performance Plots | Drain Current vs Input Power

Test conditions, unless otherwise noted : T = +25 °C, V_D = 28V, I_{DQ} = 500mA, Characterized at CW

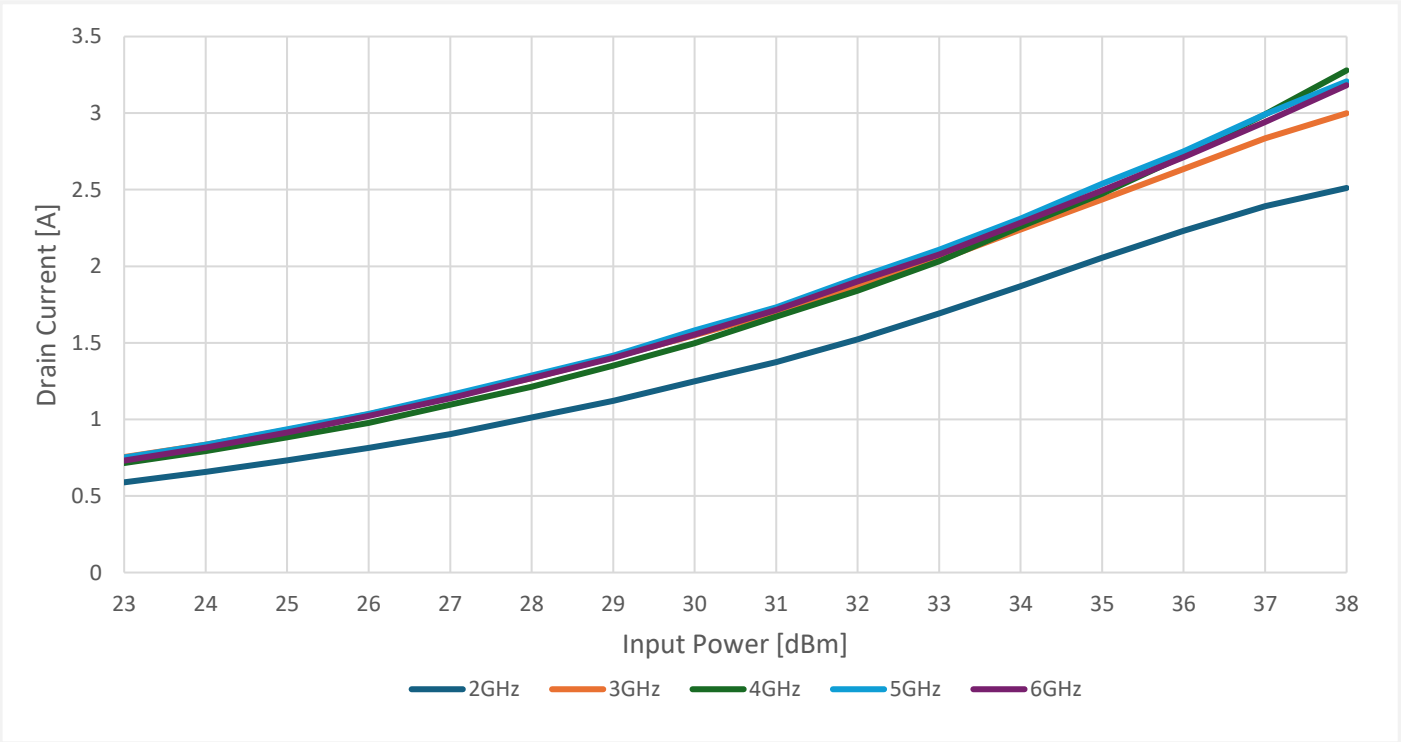

㈜웨이비스 Unauthorized Copying and Distribution Forbidden WVQ-0803-18 Rev.B

WGB01006020F-LV3

1.0GHz - 6.0GHz 20W GaN Amplifier

Package Dimensions

Notes:

1. All dimensions are in millimeters.
2. Dimension tolerances are ±0.20 mm for single-decimal dimensions (X.X) and ±0.15 mm for double-decimal dimensions (X.XX), unless otherwise noted..

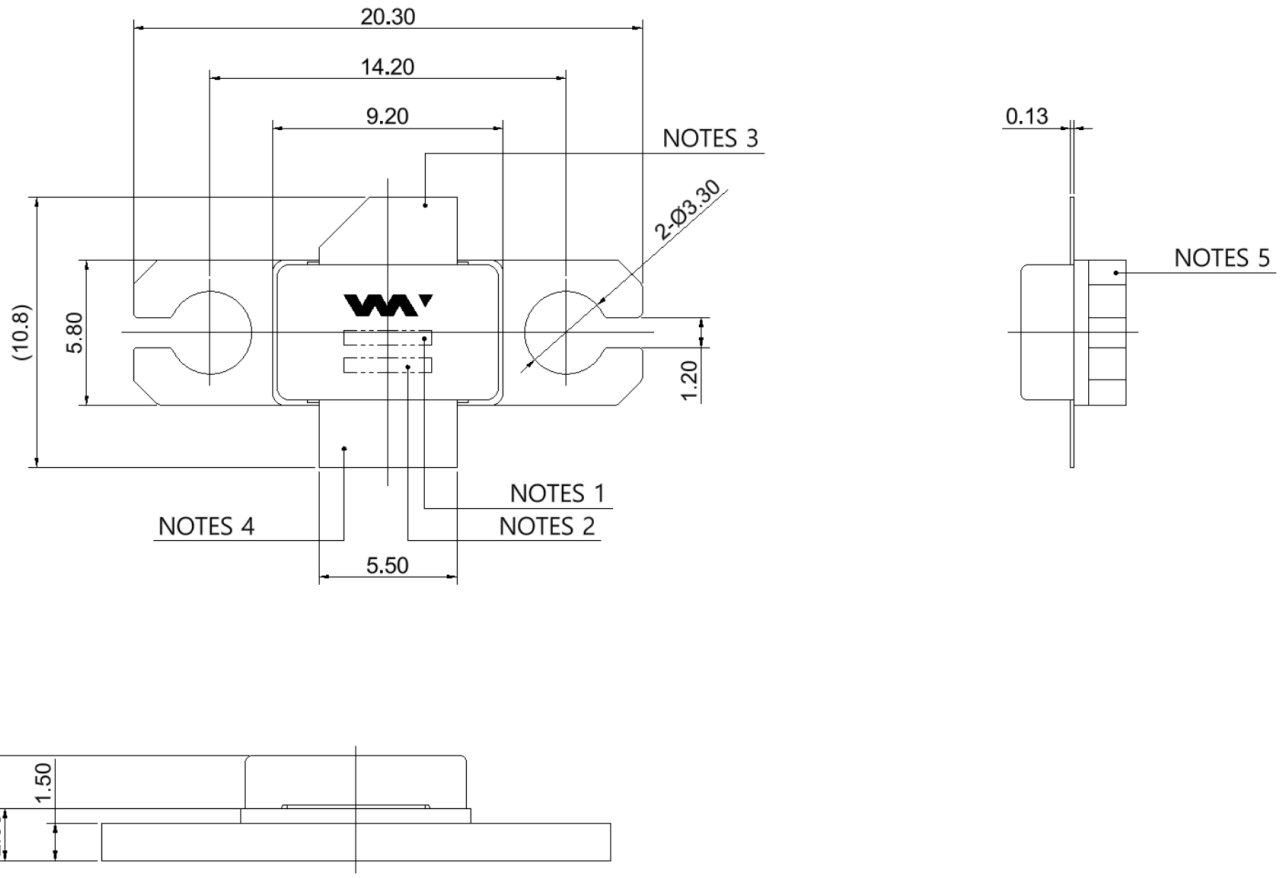

NOTES

1. Model Name
2. Lot No / Serial No
3. Vg / RF IN
4. Vd / RF out
5. GND

㈜웨이비스 Unauthorized Copying and Distribution Forbidden

WGB01006020F-LV3

1.0GHz - 6.0GHz 20W GaN Amplifier

Evaluation Board of 2.0GHz - 6.0GHz

Notes:

1. Evaluation Board Size 65 X 40 [mm]

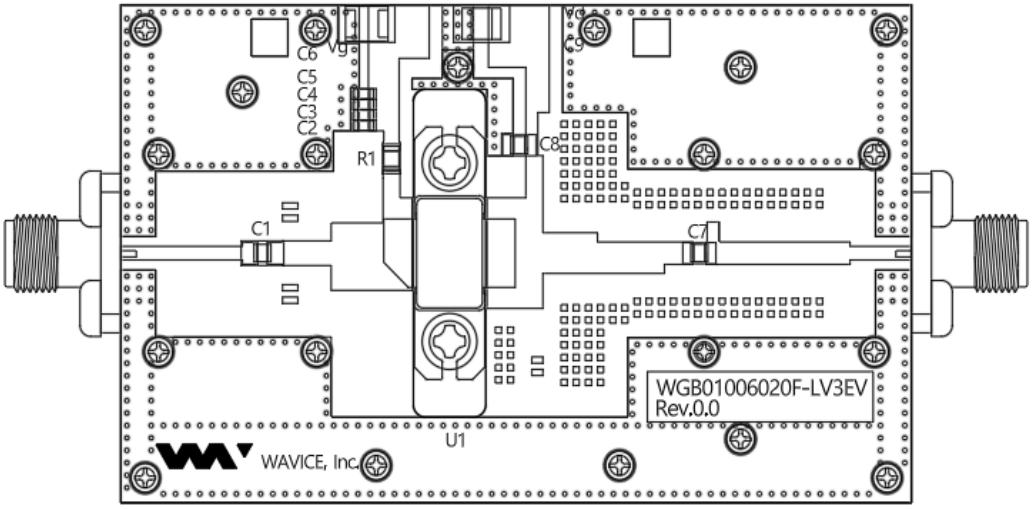

Bill of Materials

Reference Designator	Value	Description
C1	2.4pF	201CHA2R4BSLE
C2	10pF	GRM1885C2A100JA01D
C3	100pF	GRM1885C2A101JA01D
C4	1nF	GRM1885C2A102JA01D
C5	1uF	GRM188D71H105KE01W
C6	2.2uF	293D225X9016B2TE3
C7	3pF	201CHA3R0BSLE
C8	10pF	201CHA100JSLE
C9	1uF	1210B105K101CT
R1	11Ω	CR-05JL7---11R
U1	20W	WGB01006020F-LV3
PCB Information	RO4350B, 20mil, 1oz	

WGB01006020F-LV3

1.0GHz - 6.0GHz 20W GaN Amplifier

Applications Information

Notes:

1. Evaluation Board Schematic

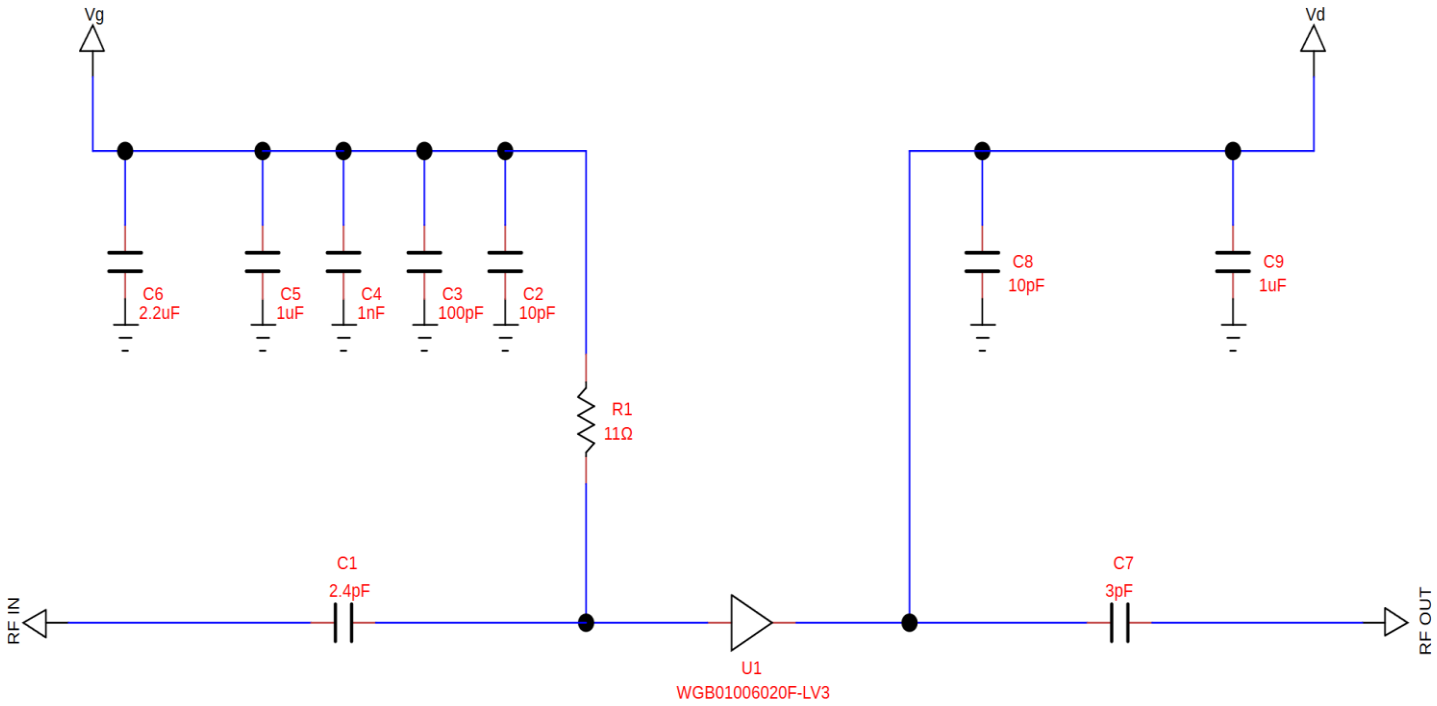

Bias-Up & Down Procedure

Procedure	Description
Bias-Up	1. Set I_D limit to 5000mA, I_G limit to 20mA
	2. Set V_G to −4.0V
	3. Set V_D + 28V
	4. Adjust V_G more positive until I_{DQ} = 500mA
	5. Apply RF signal
Bias-Down	1. Turn off RF signal
	2. Reduce V_G to −4.0V. Ensure I_{DQ} ~ 0mA
	3. Set V_D to 0
	4. Turn off V_D supply
	5. Turn off V_G supply

WGB01006020F-LV3

1.0GHz - 6.0GHz 20W GaN Amplifier

Handling Precautions

Parameter	Test Methodology
ESD – Human Body MODEL (HBM)	JEDEC JESD22 A114-D
ESD – Charged Device MODEL (CDM)	JEDEC JESD22 C101-C
MSL – Moisture Sensitivity Level	IPC/JEDEC Standard J-STD-020

Solderability

The component leads should be manually soldered, and the package cannot be subjected to conventional reflow processes. The use of no-clean solder to avoid washing after soldering is recommended.

Contact Information

- Web : www.wavice.com
- Tel : +82-31-260-8600
- Email : sales@wavice.com

Notes & Disclaimer

Specifications are subject to change without notice. Wavice Inc. believes the information contained within this data sheet to be accurate and reliable. However, no responsibility is assumed by Wavice for any infringement of patents or other rights of third parties which may result from its use. No license is granted by implication or otherwise under any patent or patent rights of Wavice. Wavice makes no warranty, representation or guarantee regarding the suitability of its products for any particular purpose.

“Typical” parameters are the average values expected by Wavice in large quantities and are provided for information purposes only. These values can and do vary in different applications and actual performance can vary over time. Customers should obtain and verify the latest relevant information before placing orders for Wavice products. All operating parameters should be validated by customer’s technical experts for each application.

Wavice products are not designed, intended or authorized for use as critical components in life-saving, or life-sustaining applications or other applications in which the failure of Wavice product could result in severe personal injury or death or in applications for planning, construction, maintenance or direct operation of a nuclear facility.

Copyright © 2017- 2030 Wavice Inc. All rights reserved. The information in this document is subject to change without notice.