WG40250SF

1.1 – 1.7 GHz 250W GaN Amplifier

Features | Pulse

- Frequency Range : 1.1 – 1.7 GHz
- Psat : 54 dBm
- Power Gain: 12 dB
- Small Signal Gain: 16 dB
- DE: 55% @Psat
- Bias : V_D = 50V, I_{DQ} = 500mA, V_G = -2.5V (Typ.)
- Characterized at Pulse duty 10%, Pulse width 100uS

Features | CW

- Frequency Range : 1.1 – 1.7 GHz
- Psat : 53 dBm
- Power Gain: 11 dB
- Small Signal Gain: 16 dB
- DE: 40% @Psat
- Bias : V_D = 50V, I_{DQ} = 500mA, V_G = -2.5V (Typ.)
- Characterized at CW

Product Image

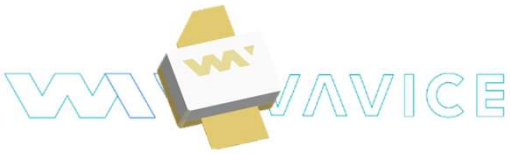

- Package Type : SCN-BG1

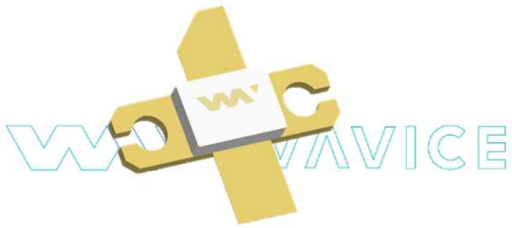

- Package Type : SCF-BG1

Description

Wavice's WG40250SF is a high power, L-Band amplifier fabricated on Wavice's Durable 0.4um GaN on SiC process. Covering the frequency range of 1.1 to 1.7 GHz, the WG40250SF typically provides 54dBm of saturated output power and 12dB of power gain while achieving 55% Drain efficiency.
The WG40250SF is ideal for use in both commercial and military radar systems.

ROHS compliant.

Applications

- Military Radar
- Commercial Radar
- Infra Structure
- Small Cell

Ordering information

Part No.	Description
WG40250SF	SCF-BG1
WG40250SP	SCN-BG1
WG40250SF-EV	WG40250SF Evaluation Board
WG40250SP-EV	WG40250SP Evaluation Board

WG40250SF

1.1 – 1.7 GHz 250W GaN Amplifier

Absolute Maximum Ratings

Parameter	Symbol	Value / Range
Drain Source Voltage	V_{DS}	55 V
Gate Source Voltage	V_{GS}	-10 to +2 V
Maximum Forward Gate Current	I_{GMAX}	44 mA
Absolute Maximum Channel Temperature	T_{CH}	+250 ℃
Storage Temperature	T_{STG}	-65 ℃ to +150 ℃
Mounting Temperature		245 ℃ / 30 sec

1) Case temperature T_C =25 ℃
2) Wavice does not recommend sustained operation above maximum operating conditions.
3) Exceeding any one or a combination of the Absolute Maximum Rating conditions may cause permanent damage to the device. Extended application of Absolute Maximum Rating conditions to the device may reduce device reliability.

Recommended Operating Conditions

Parameter	Symbol	Value / Range
Drain Source Voltage	V_{DS}	50 V
Drain Current	I_{DQ}	500 mA
Gate Source Voltage (Typical)	V_{GS}	-2.5 V
Case Operating Temperature		~40 ℃ to +85 ℃

1) Electrical specifications are measured at specified test conditions. Specifications are not guaranteed over all recommended operating conditions.
2) Proper ESD(electrostatic discharge) control techniques should be used when handling these devices.

Thermal Characteristics

Parameter	Symbol	Units	Value	Test Conditions
Thermal Resistance using Infrared Measurement of Die Surface Temperature	R_{θ}(IR)	℃/W	0.16	Tbase = 85°C, V_D = 50V, I_{DQ}= 500mA, Freq = 1.1 – 1.7 GHz
Peak IR Surface Temperature	T_{CH}	℃	115.8	

1) Thermal resistance determined to the case temperature (85 ℃)
2) Channel temperature indicated is an IR scan equivalent temperature, Thermal resistance is calculated using this value.

WG40250SF

1.1 – 1.7 GHz 250W GaN Amplifier

Electrical Specifications

1) Characterized at Pulse duty 10%, Pulse width 100uS

Parameter	Units	Min	Typ	Max
Saturated Output Power [1)]	dBm		54	
Drain Efficiency	%		55	
Power Gain	dB		12	
Small Signal Gain	dB		16	

2) Characterized at CW

Parameter	Units	Min	Typ	Max
Saturated Output Power [2)]	dBm		53	
Drain Efficiency	%		40	
Power Gain	dB		11	
Small Signal Gain	dB		16	

Test conditions, unless otherwise noted :

- T_A = 25 °C, V_D = 50V, I_{DQ} = 500mA, V_G = -2.5V (Typ.)
- Test Frequency : 1.1 – 1.7 GHz
- Measured in WG40250SF Evaluation Board

Parameter	Units	Min	Typ	Max	Test Conditions
Gate Threshold Voltage	V	-3.8	-2.7	-2.0	V_{DS}= 10V, I_D= 44 mA
Drain-Source Breakdown Voltage	V	150			V_{GS}= -8V, I_D= 44 mA
Drain Current(I_{DMAX})[1)]	A	33	41.8		V_{DS}= 10V, V_{GS}= 2.0V
Gate Forward Voltage	V		2		I_{GS}= 44 mA

Test conditions, unless otherwise noted :

1) Scaled from PCM unit cell

WG40250SF

1.1 – 1.7 GHz 250W GaN Amplifier

Performance Plots | S-Parameter

Test conditions, unless otherwise noted: T = +25 °C, V_D = 50 V, I_{DQ} = 500 mA

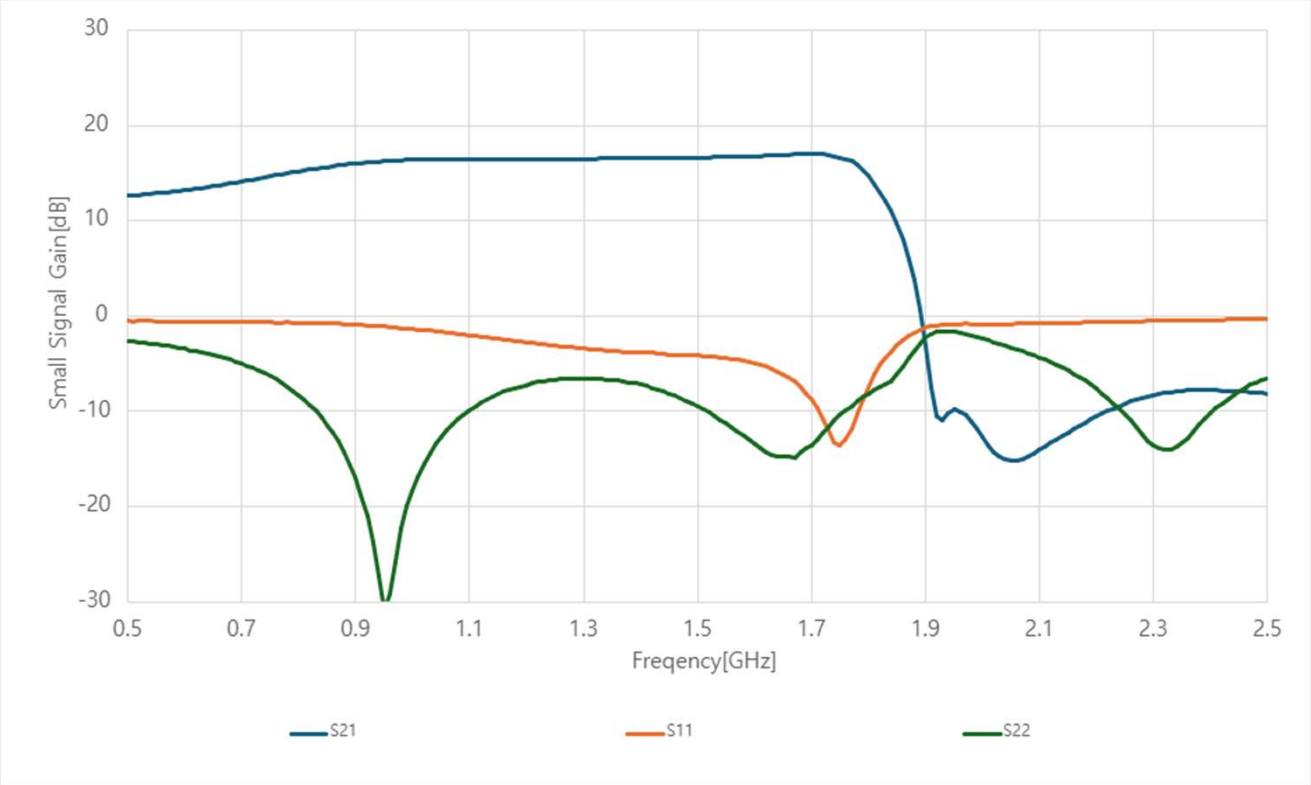

WG40250SF

1.1 – 1.7 GHz 250W GaN Amplifier (Pulse)

Performance Plots | Peak Power / DE vs Input Power

Test conditions, unless otherwise noted: T = +25 °C, V_D = 50 V, I_{DQ} = 500 mA, Pulse duty 10%, Pulse width 100uS

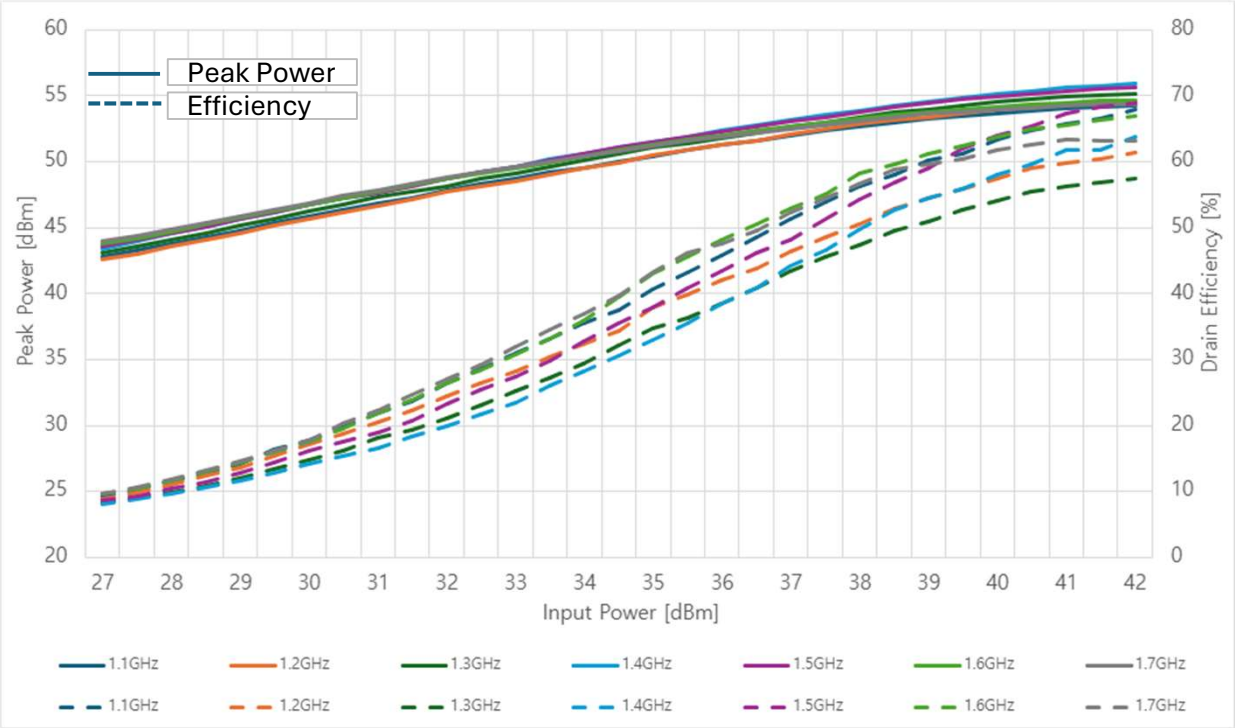

Performance Plots | Power Gain vs Input Power

Test conditions, unless otherwise noted: T = +25 °C, V_D = 50 V, I_{DQ} = 500 mA, Pulse duty 10%, Pulse width 100uS

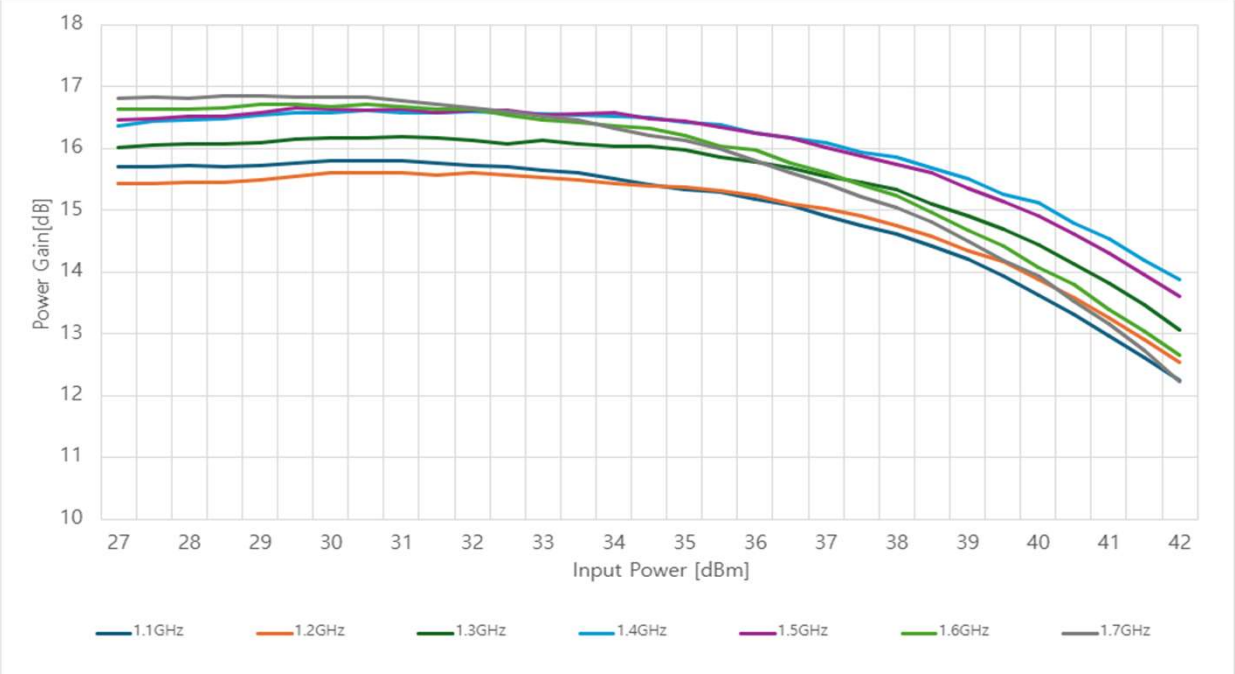

WG40250SF

1.1 – 1.7 GHz 200W GaN Amplifier (CW)

Performance Plots | Peak Power / DE vs Input Power

Test conditions, unless otherwise noted: T = +25 °C, V_D = 50 V, I_{DQ} = 500 mA, Characterized at CW

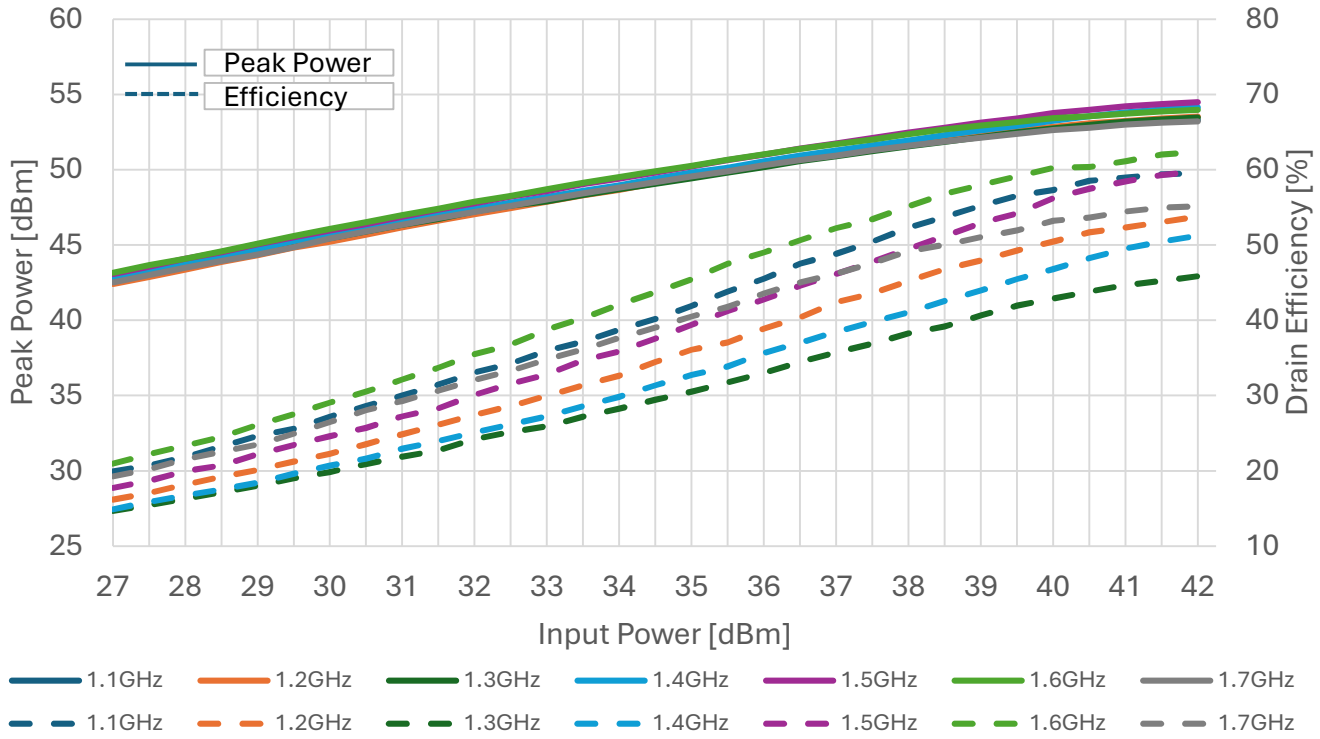

Performance Plots | Power Gain vs Input Power

Test conditions, unless otherwise noted: T = +25 °C, V_D = 50 V, I_{DQ} = 500 mA, Characterized at CW

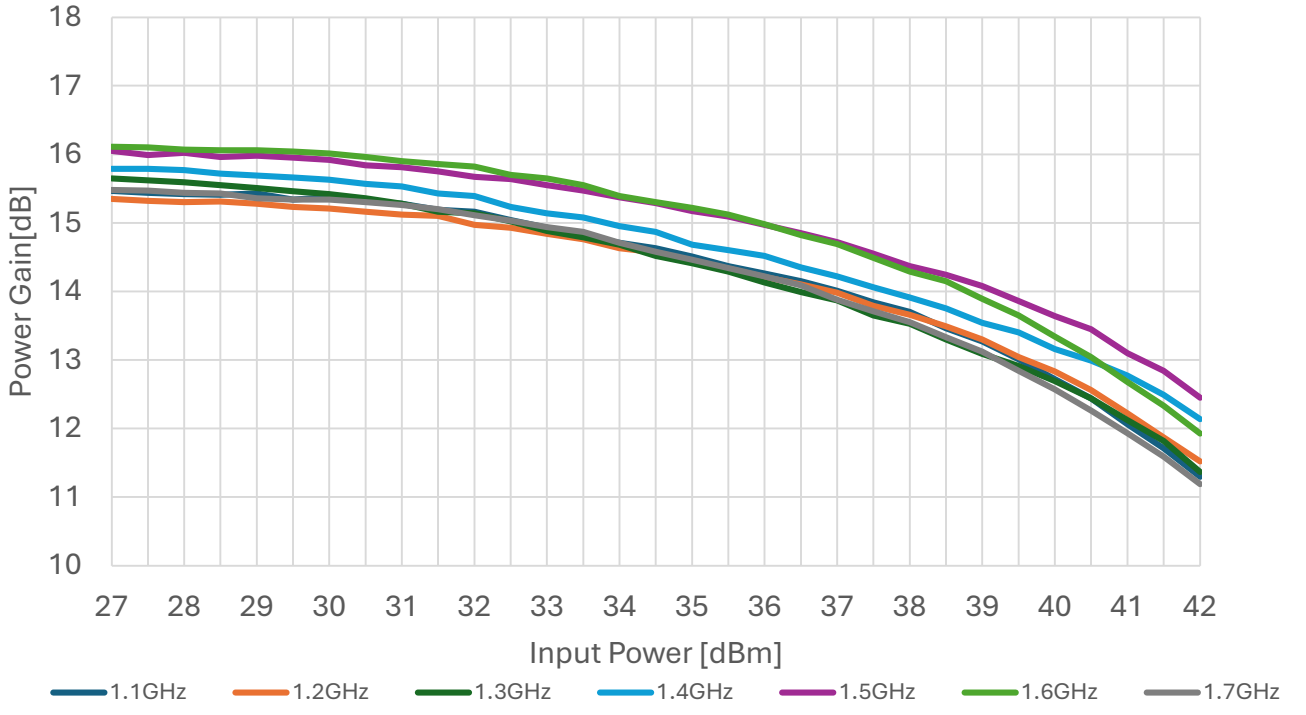

WG40250SF

1.1 – 1.7 GHz 250W GaN Amplifier

Package Dimensions

Notes:
1. All dimensions are in millimeters.
2. Dimension tolerances are ±0.20 mm for single-decimal dimensions (X.X) and ±0.15 mm for double-decimal dimensions (X.XX), unless otherwise noted.

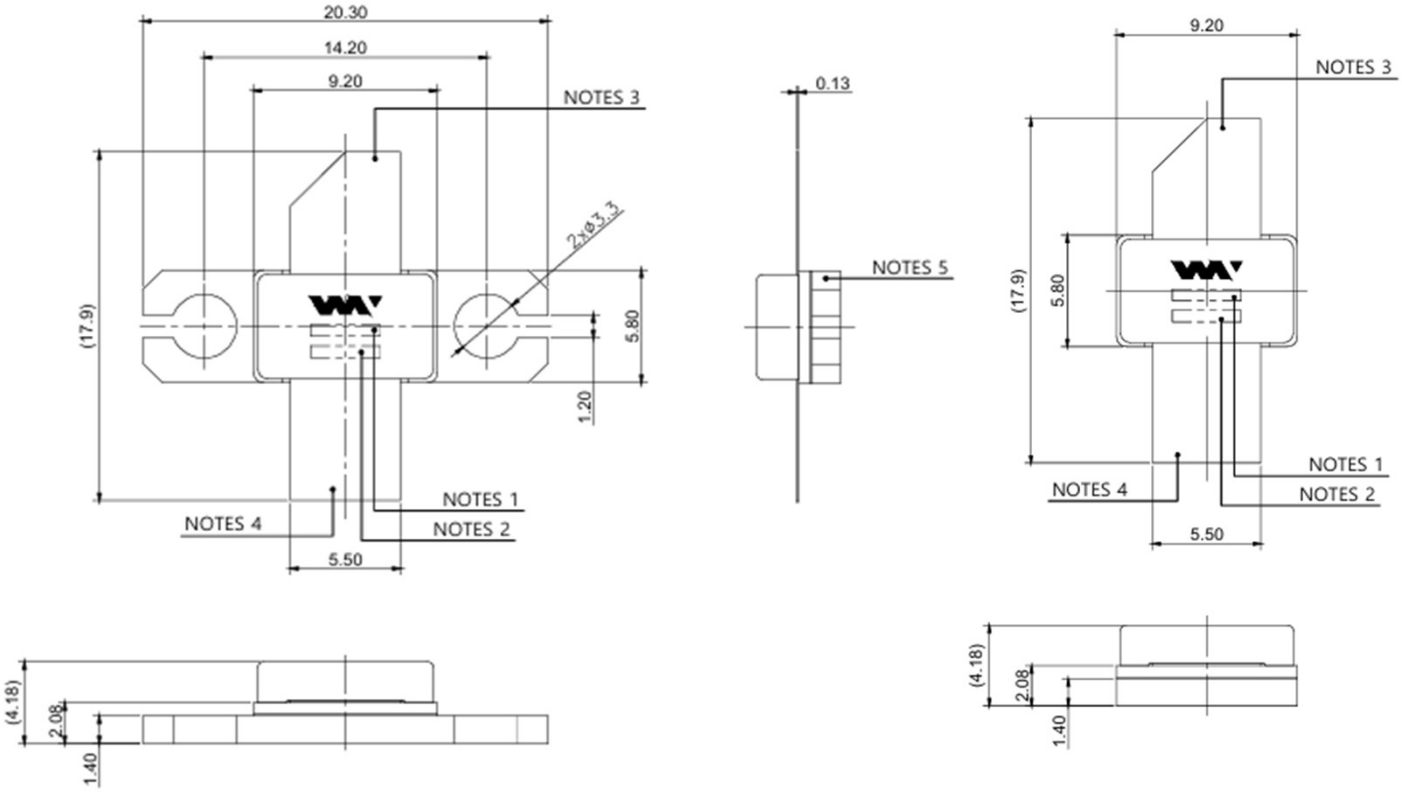

NOTES
1. Model Name
2. Lot No / Serial No
3. Vg / RF IN
4. Vd / RF out
5. GND

WG40250SF

1.1 – 1.7 GHz 250W GaN Amplifier

Evaluation Board

Notes:

1. Evaluation Board Size 40 X 128 [mm]

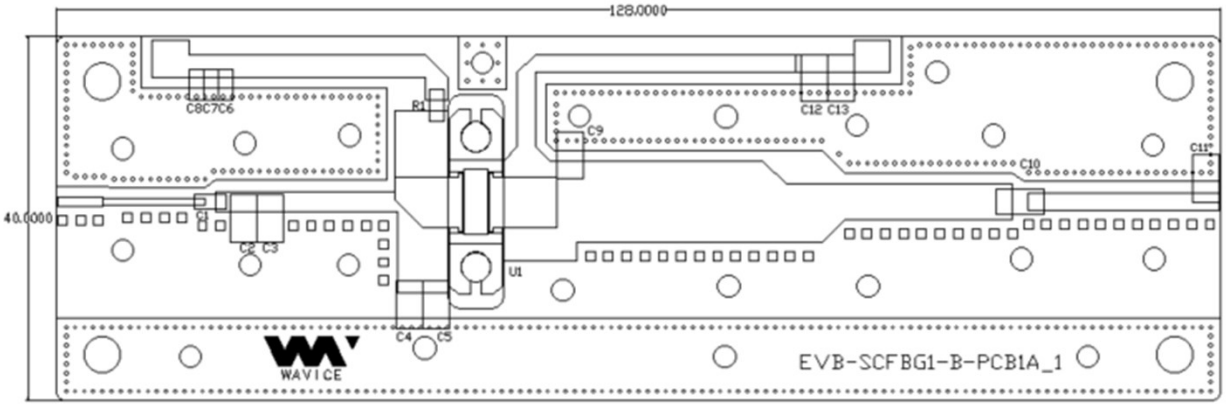

Bill of Materials

Reference Designator	Value	Description
C1	6.8pF	201 HQ CAP, 200V
C2	0.5pF	501 HQ CAP, 200V
C3	1.3pF	501 HQ CAP, 200V
C4	2pF	501 HQ CAP, 200V
C5	1.8pF	501 HQ CAP, 200V
C6	100pF	0603 Chip CAP, 50V
C7	1nF	0603 Chip CAP, 50V
C8	1uF	0603 Chip CAP, 50V
C9	2.7pF	501 HQ CAP, 200V
C10	12pF	501 HQ CAP, 200V
C11	0.5pF	501 HQ CAP, 200V
C12	10uF	MLCC CAP, 10uF, 100V
C13	10uF	MLCC CAP, 10uF, 100V
R1	10 ohm	0603 Chip Res, ±5%
U1	250W	Wavice GaN Transistor
PCB Information	RO4350B, 20mil, 1oz	

WG40250SF

1.1 – 1.7 GHz 250W GaN Amplifier

Applications Information

Notes:

1. Evaluation Board Schematic

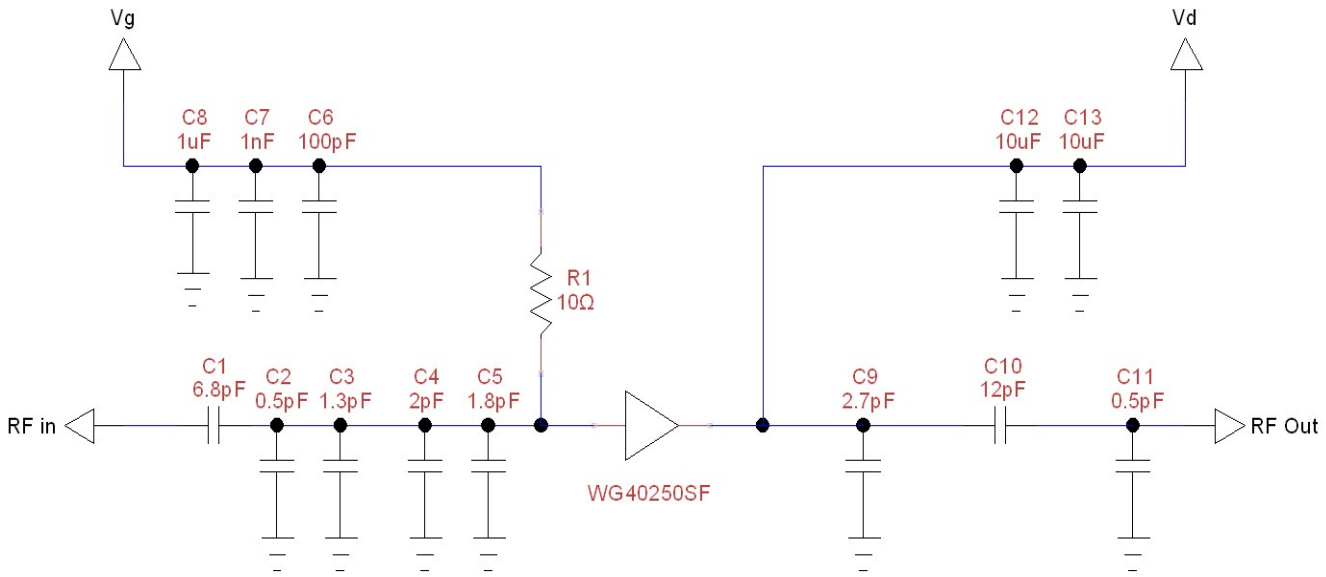

Bias-Up & Down Procedure

Procedure	Description
Bias-Up	1. Set I_D limit to 5000 mA, I_G limit to 20 mA
	2. Set V_G to −4.0 V
	3. Set V_D +50 V
	4. Adjust V_G more positive until I_{DQ}
	5. Apply RF signal
Bias-Down	1. Turn off RF signal
	2. Reduce V_G to −4.0 V. Ensure I_{DQ} ~ 0 mA
	3. Set V_D to 0
	4. Turn off V_D supply
	5. Turn off V_G supply

WG40250SF

1.1 – 1.7 GHz 250W GaN Amplifier

Handling Precautions

Parameter	Class	Test Methodology
ESD – Human Body Model (HBM)	Class 1B	JEDEC JESD22 A114-D
ESD – Charged Device Model (CDM)	Class IV	JEDEC JESD22 C101-C
MSL – Moisture Sensitivity Level	N/A	IPC/JEDEC Standard J-STD-020

Solderability

The component leads should be manually soldered, and the package cannot be subjected to conventional reflow processes. The use of no-clean solder to avoid washing after soldering is recommended.

Contact Information

- Web : www.wavice.com
- Tel : +82-31-260-8600
- Email : sales@wavice.com

Notes & Disclaimer

Specifications are subject to change without notice. Wavice Inc. believes the information contained within this data sheet to be accurate and reliable. However, no responsibility is assumed by Wavice for any infringement of patents or other rights of third parties which may result from its use. No license is granted by implication or otherwise under any patent or patent rights of Wavice. Wavice makes no warranty, representation or guarantee regarding the suitability of its products for any particular purpose.

“Typical” parameters are the average values expected by Wavice in large quantities and are provided for information purposes only. These values can and do vary in different applications and actual performance can vary over time. Customers should obtain and verify the latest relevant information before placing orders for Wavice products. All operating parameters should be validated by customer’s technical experts for each application.

Wavice products are not designed, intended or authorized for use as critical components in life-saving, or life-sustaining applications or other applications in which the failure of Wavice product could result in severe personal injury or death or in applications for planning, construction, maintenance or direct operation of a nuclear facility.

Copyright © 2017- 2024 Wavice Inc. All rights reserved. The information in this document is subject to change without notice.