WG051059030I-LV

5.1 – 5.9GHz 30 Watt GaN Amplifier

Production Description

Wavice's WG051059030I-LV is a high-power, C-Band amplifier fabricated on 0.3um Durable GaN on SiC process. Covering the frequency range of 5.1 to 5.9GHz, the WG051059030I-LV typically provides 44.8dBm of saturated output power and 8.8dB of power gain while achieving 30% power-added-efficiency.

The WG051059030I-LV is matched to 50-ohms on the input and 50-ohms on the output. It is ideal for use in both commercial and military radar systems.

ROHS compliant.

Evaluation boards are available upon request.

Product Features

- 50-Ohm Input/Output Matched
- Frequency Range : 5.1 – 5.9 GHz
- Pout: 44.8dBm (P_{IN} = 36dBm)
- Power Gain: 8.8dB (P_{IN} = 36dBm)
- PAE: >30% (P_{IN} = 36dBm)
- Bias : V_D = 28V, I_{DQ} = 30mA, V_G = -2.7V(Typ)
- Characterized at CW

Applications

- Military Radar
- Commercial Radar

Package Type

- Package Type : SCF-GG2

Ordering information

Type	Description	Package Type
WG051059030I-LV	5.1-5.9 GHz 30W IMFET	SCF-GG2

Rev. 1.2 (25-05-15)

Copyright © 2017- 2021 Wavice Inc. All rights reserved. The information in this document is subject to change without notice.

46, Samsung 1-ro 5-gil, Hwaseong-si, Gyeonggi-do, Korea(18449)
Tel : +82-31-260-8600, Fax : +82-31-260-8699, E-mail : sales@wavice.com

Absolute Maximum Ratings(not simultaneous)

Parameter	Symbol	Unit	Value	Conditions
Storage Temperature	-	℃	-65~150	
Operation Junction Temperature	T_J	℃	225	
Gate to Source Voltage	V_{GS}	V	-10, +2	25℃
Drain to Source Voltage	V_{DS}	V	150	25℃
Operating Voltage	V_{DD}	V_{DC}	50	25℃
Max Forward Gate Current	I_{GMAX}	mA	42	25℃
Soldering Temperature	T_S	℃	245	30 seconds

- **Note**

  1) Current Limit for long term, reliable operation

  2) Exceeding any one or a combination of the Absolute Maximum Rating conditions may cause permanent damage to the device. Extended application of Absolute Maximum Rating conditions to the device may reduce device reliability.

Thermal Characteristics

Parameter	Symbol	Unit	Value	Conditions
Thermal Resistance, Junction to Case (packaged)[1]	$R_{\theta JC}$	℃/W	2.6	T_C=85℃

- **Note**

  1) Measured for WG051059030I-LV at P_{DISS}=20W

Copyright © 2017- 2021 Wavice Inc. All rights reserved. The information in this document is subject to change without notice.

46, Samsung 1-ro 5-gil, Hwaseong-si, Gyeonggi-do, Korea(18449)
Tel : +82-31-260-8600, Fax : +82-31-260-8699, E-mail : sales@wavice.com

Typical Performance

- Test Conditions : 25℃, Frequency : 5.1 ~ 5.9 GHz

	5.1GHz	5.3GHz	5.5GHz	5.7GHz	5.9GHz
Output Power [dBm]	45.2	46.2	46.0	45.7	45.2
Power Gain [dB]	9.2	10.2	10.0	9.7	9.2
Power Added Efficiency [%]	32.6	41.5	39.6	40.6	39.2

DC Characteristics

- Test Conditions : 25℃

	Sym	Units	Min	Typ	Max.	Conditions
Gate Threshold Voltage	V_{TH}	V	-3.4	-2.7	-2.0	V_{DS}= 10V, I_D= 21mA
Drain-Source Breakdown Voltage	V_{BD}	V	150			V_{GS}= -8V, I_D= 21mA
Gate Forward Voltage	V_{G-ON}	V		2		I_{GS}= 21mA

1) Scaled from PCM unit cell

RF Characteristics

- Test Conditions : 25℃, Frequency : 5.1 ~ 5.9 GHz

	Min	Typ.	Max.	Units	Conditions
Small Signal Gain		13		dB	V_{DD}= 28V, I_{DQ}=300mA, P_{IN}=-5 dBm
Input Return Loss		-5		dB	V_{DD}= 28V, I_{DQ}=300mA, P_{IN}=-5 dBm
Output Return Loss		-6		dB	V_{DD}= 28V, I_{DQ}=300mA, P_{IN}=-5 dBm
Power Output	44.8			dBm	V_{DD}= 28V, I_{DQ}=30mA, P_{IN}=36 dBm
Power Added Efficiency	30			%	V_{DD}= 28V, I_{DQ}=30mA, P_{IN}=36 dBm
Power Gain	8.8			dB	V_{DD}= 28V, I_{DQ}=30mA, P_{IN}=36 dBm

Copyright © 2017- 2021 Wavice Inc. All rights reserved. The information in this document is subject to change without notice.

46, Samsung 1-ro 5-gil, Hwaseong-si, Gyeonggi-do, Korea(18449)
Tel : +82-31-260-8600, Fax : +82-31-260-8699, E-mail : sales@wavice.com

Typical S-Parameters

- VDD = 28V, ID = 300mA, PIN = -5dBm

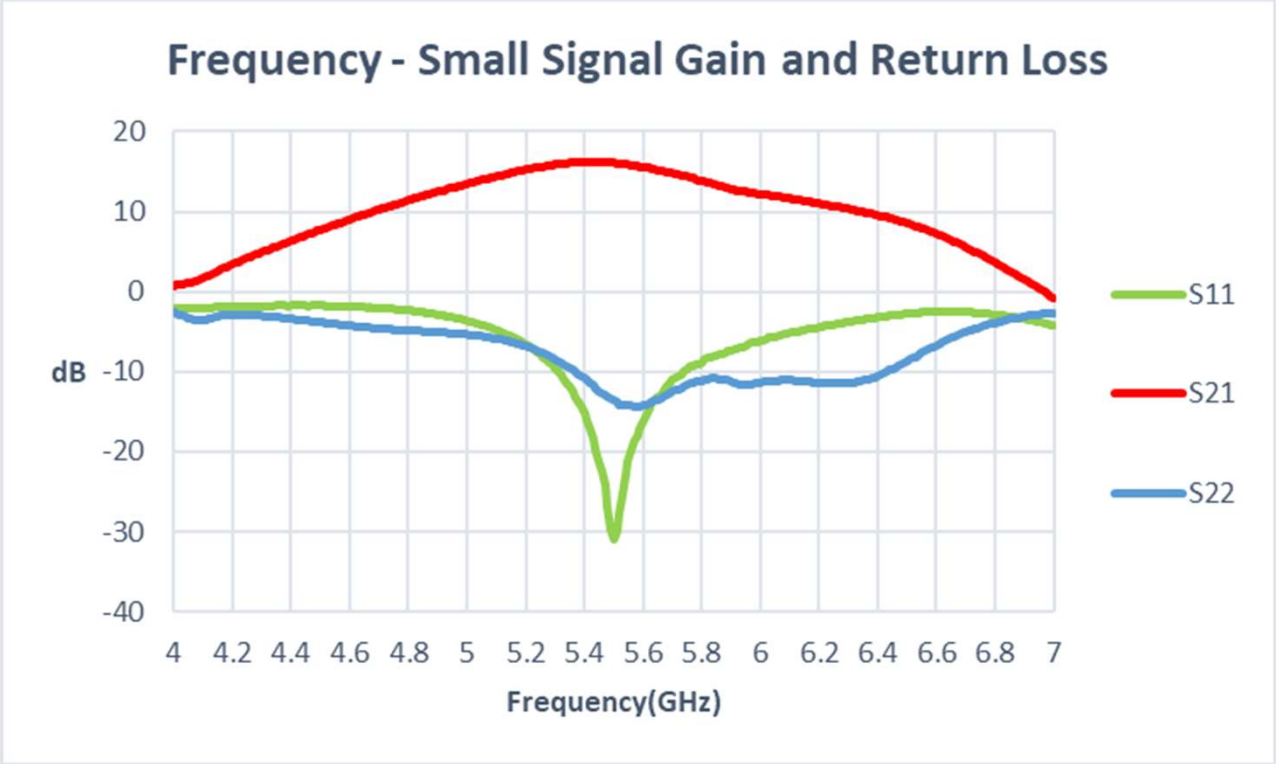

Output Power[dBm] vs Input Power[dBm]

- VDD = 28V, CW TEST

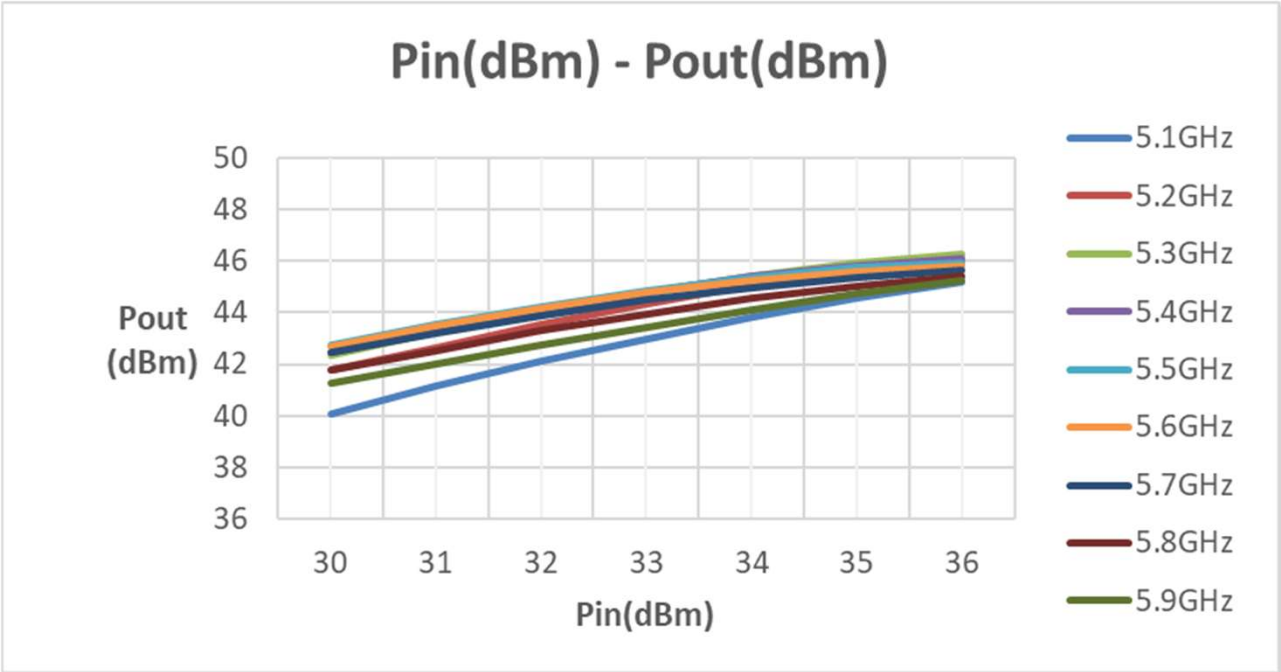

Rev. 1.2 (25-05-15)

Copyright © 2017- 2021 Wavice Inc. All rights reserved. The information in this document is subject to change without notice.

46, Samsung 1-ro 5-gil, Hwaseong-si, Gyeonggi-do, Korea(18449)
Tel : +82-31-260-8600, Fax : +82-31-260-8699, E-mail : sales@wavice.com

Power Gain[dB] vs Input Power[dBm]

- VDD = 28V, CW TEST

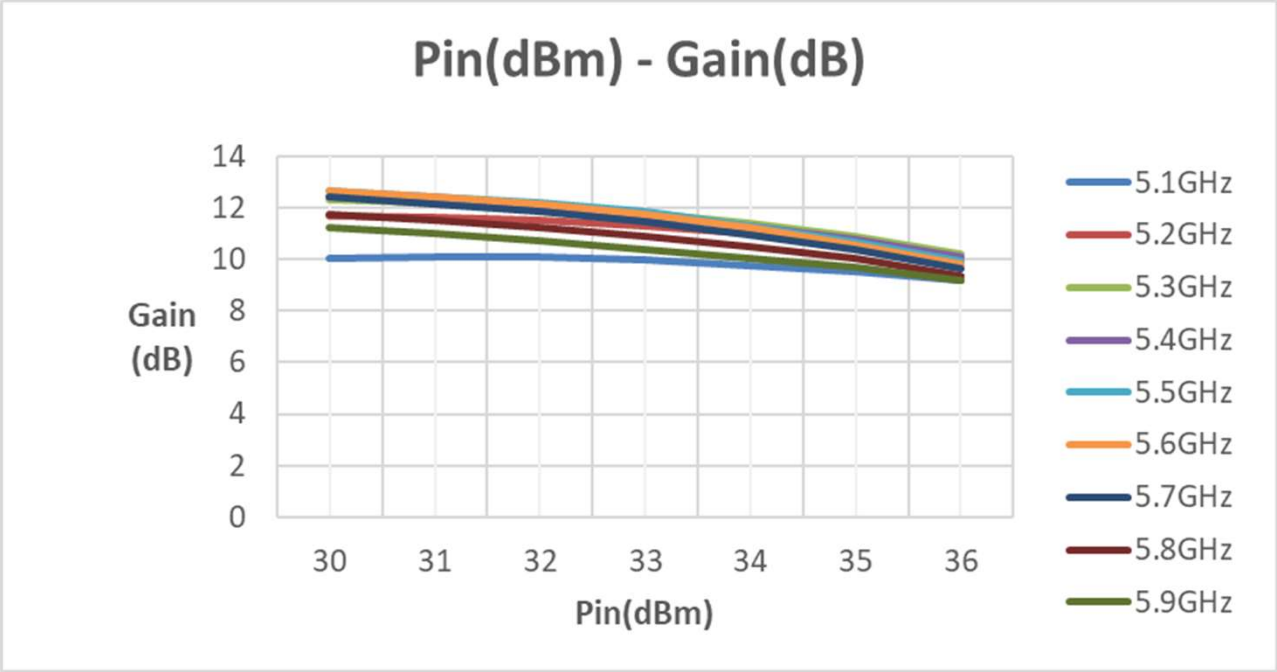

PAE[%] vs Input Power[dBm]

- VDD = 28V, CW TEST

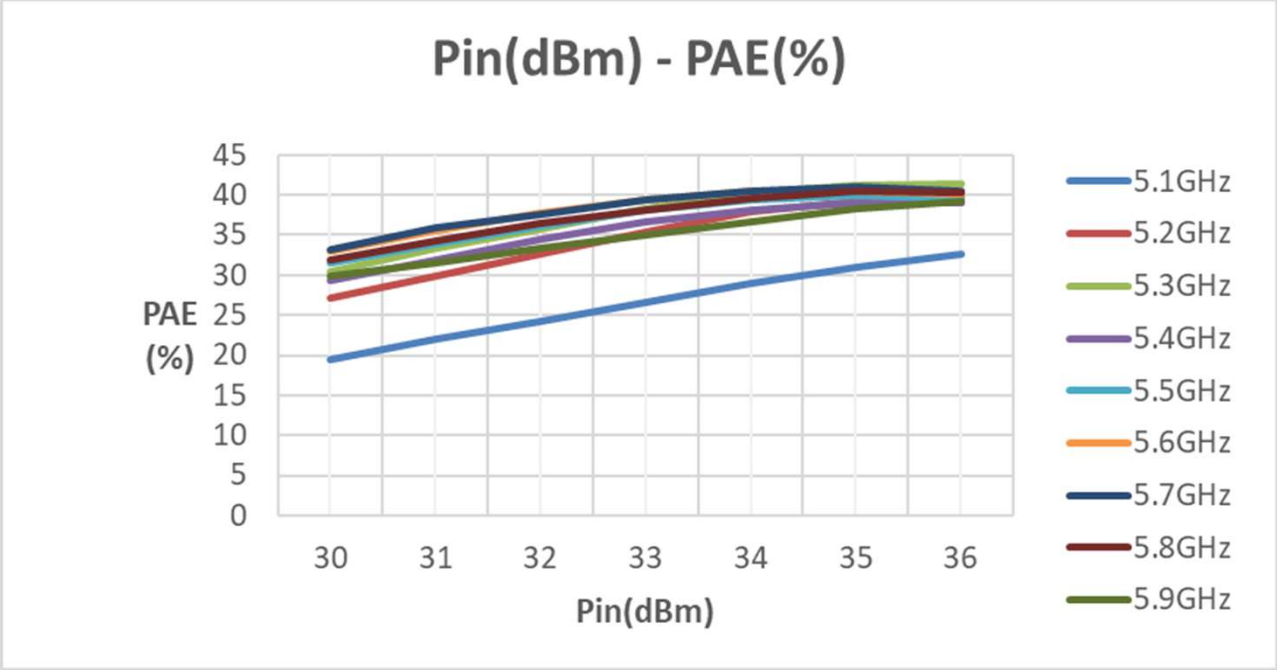

Rev. 1.2 (25-05-15)

Copyright © 2017- 2021 Wavice Inc. All rights reserved. The information in this document is subject to change without notice.

46, Samsung 1-ro 5-gil, Hwaseong-si, Gyeonggi-do, Korea(18449)
Tel : +82-31-260-8600, Fax : +82-31-260-8699, E-mail : sales@wavice.com

WG051059030I-LV
5.1 – 5.9GHz 30 Watt GaN Amplifier

Evaluation Board

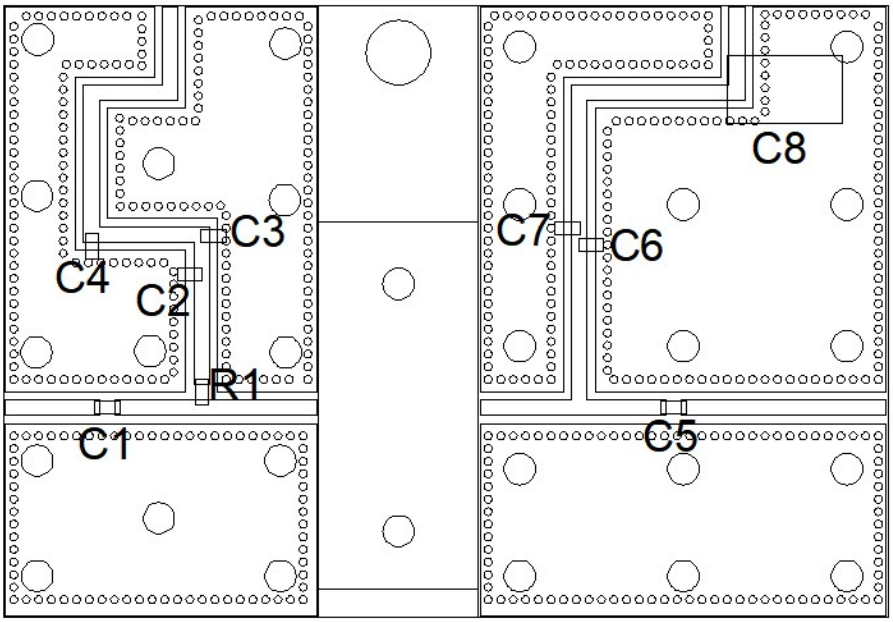

Bill of Materials

Designator	Part Name	Manufacturer	Qty
C1	800A3R9BT250XT	American technical ceramics	1
C2	GRM1885C2A100JA01D	Murata Electronics	1
C3	GRM1885C2A470JA01D	Murata Electronics	1
C4	GRM1885C2A820JA01D	Murata Electronics	1
C5	800A2R4BT250XT	American technical ceramics	1
C6	800A200J250XT	American technical ceramics	1
C7	800A560J250XT	American technical ceramics	1
C8	EEE-1HA221P	Panasonic	1
R1	CR-03JL7---51R	VIKING	1
Amplifier	WG051059030I-LV	Wavice	1
PCB	Rogers, RO4350B 20mil, 1oz	Rogers Corporation	1

Copyright © 2017- 2021 Wavice Inc. All rights reserved. The information in this document is subject to change without notice.

46, Samsung 1-ro 5-gil, Hwaseong-si, Gyeonggi-do, Korea(18449)
Tel : +82-31-260-8600, Fax : +82-31-260-8699, E-mail : sales@wavice.com

Application Circuit

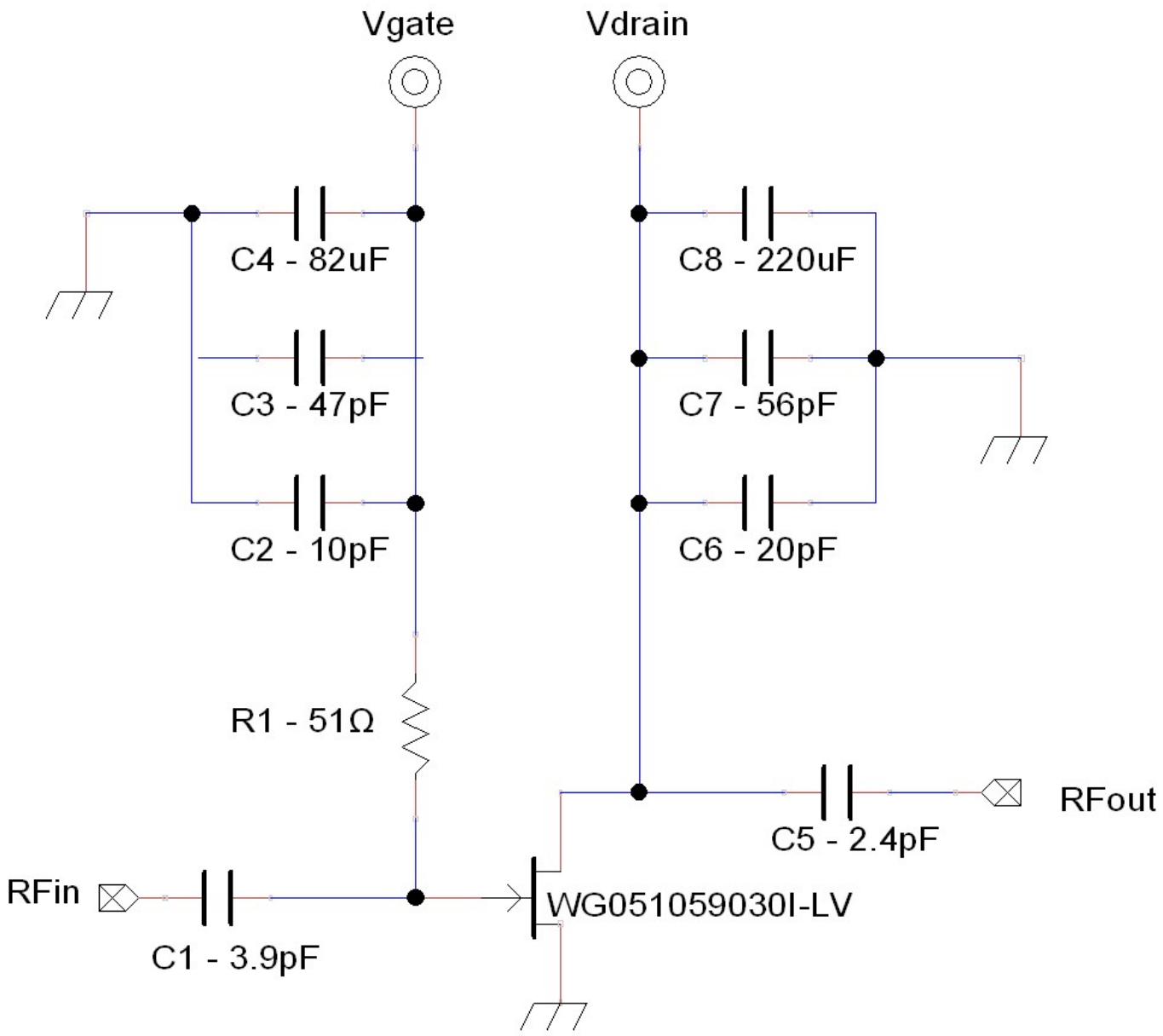

Copyright © 2017- 2021 Wavice Inc. All rights reserved. The information in this document is subject to change without notice.

46, Samsung 1-ro 5-gil, Hwaseong-si, Gyeonggi-do, Korea(18449)
Tel : +82-31-260-8600, Fax : +82-31-260-8699, E-mail : sales@wavice.com

Product Dimensions

Notes:
1. All dimensions are in millimeters.
2. Dimension tolerances are ±0.20 mm for single-decimal dimensions (X.X) and ±0.15 mm for double-decimal dimensions (X.XX), unless otherwise noted.

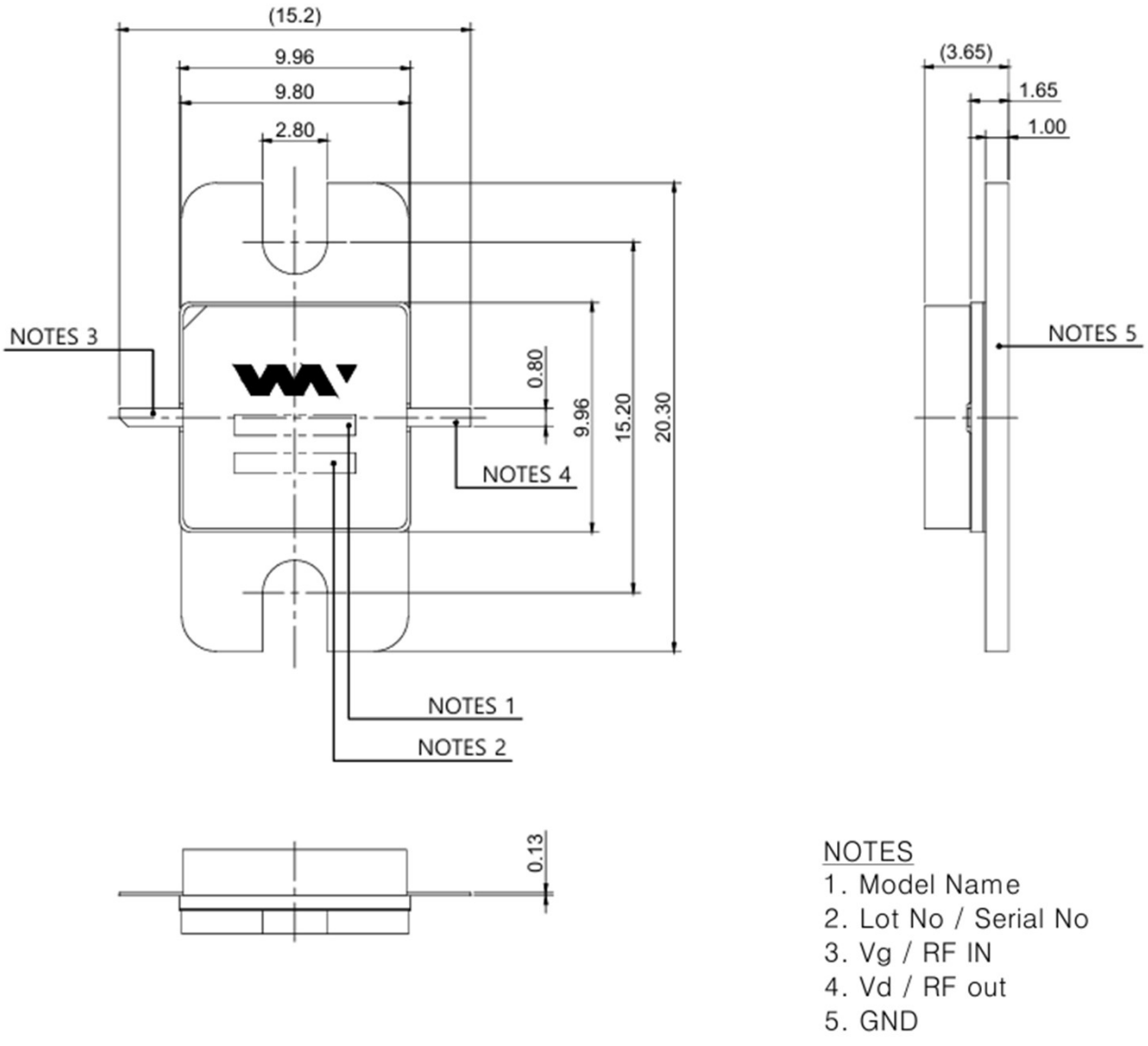

NOTES
1. Model Name
2. Lot No / Serial No
3. Vg / RF IN
4. Vd / RF out
5. GND

Copyright © 2017- 2021 Wavice Inc. All rights reserved. The information in this document is subject to change without notice.

46, Samsung 1-ro 5-gil, Hwaseong-si, Gyeonggi-do, Korea(18449)
Tel : +82-31-260-8600, Fax : +82-31-260-8699, E-mail : sales@wavice.com

Naming Rule

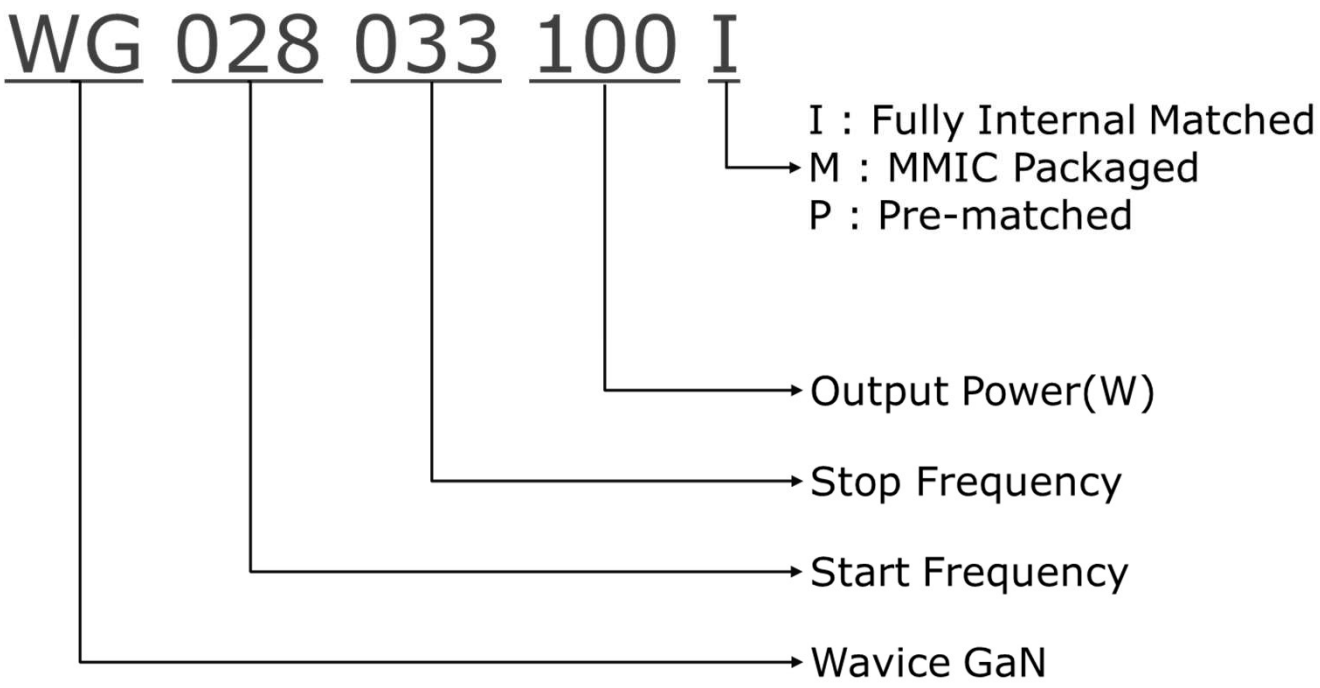

Disclaimer

Specifications are subject to change without notice. Wavice Inc. believes the information contained within this data sheet to be accurate and reliable. However, no responsibility is assumed by Wavice for any infringement of patents or other rights of third parties which may result from its use. No license is granted by implication or otherwise under any patent or patent rights of Wavice. Wavice makes no warranty, representation or guarantee regarding the suitability of its products for any particular purpose. "Typical" parameters are the average values expected by Wavice in large quantities and are provided for information purposes only. These values can and do vary in different applications and actual performance can vary over time. Customers should obtain and verify the latest relevant information before placing orders for Wavice products. All operating parameters should be validated by customer's technical experts for each application.

Wavice products are not designed, intended or authorized for use as critical components in life-saving, or life-sustaining applications or other applications in which the failure of Wavice product could result in severe personal injury or death or in applications for planning, construction, maintenance or direct operation of a nuclear facility.

Copyright © 2017- 2021 Wavice Inc. All rights reserved. The information in this document is subject to change without notice.

46, Samsung 1-ro 5-gil, Hwaseong-si, Gyeonggi-do, Korea(18449)
Tel : +82-31-260-8600, Fax : +82-31-260-8699, E-mail : sales@wavice.com