# WG029034550I

## 2.9 – 3.4GHz 550 Watt GaN Amplifier

## Production Description

Wavice's WG029034550I is a high-power, S-Band amplifier fabricated on 0.4um GaN on SiC process. Covering the frequency range of 2.9 to 3.4GHz, the WG029034550I typically provides 57.4dBm of saturated output power and 9.4dB of power gain while achieving 40% drain-efficiency.

The WG029034550I is matched to 50-ohms on the input and 50-ohms on the output. It is ideal for use in both commercial and military radar systems.

ROHS compliant.

Evaluation boards are available upon request.

## Product Features

- 50-Ohm Input/Output Matched
- Frequency Range : 2.9 – 3.4 GHz
- Pout: 57.4dBm ($P_{IN}$ = 48dBm)
- Power Gain: 9.4dB ($P_{IN}$ = 48dBm)
- Drain Efficiency: >40% ($P_{IN}$ = 48dBm)
- Bias : $V_D$ = 50V, $I_{DQ}$ = 20mA, $V_G$ = -2.8V(Typ)
- Characterized at PW = 300us, Duty = 20%

## Applications

- Military Radar
- Commercial Radar

## Package Type

- Package Type : SCF-NM1

## Ordering information

| Type | Description | Package Type |
|---|---|---|
| WG029034550I | 2.9-3.4 GHz 550W IMFET | SCF-NM1 |

Rev. 1.5 (25-04-17)

Copyright © 2017- 2021 Wavice Inc. All rights reserved. The information in this document is subject to change without notice.



46, Samsung 1-ro 5-gil, Hwaseong-si, Gyeonggi-do, Korea(18449)
Tel : +82-31-260-8600, Fax : +82-31-260-8699, E-mail : sales@wavice.com

## Absolute Maximum Ratings(not simultaneous)

| Parameter | Symbol | Unit | Value | Conditions |
|---|---|---|---|---|
| Storage Temperature | - | ℃ | -65~150 | |
| Operation Junction Temperature | $T_J$ | ℃ | 225 | |
| Case Operating Temperature | $T_C$ | ℃ | -40~85 | |
| Gate to Source Voltage | $V_{GS}$ | V | -10, +2 | 25℃ |
| Drain to Source Voltage | $V_{DS}$ | V | 150 | 25℃ |
| Operating Voltage | $V_{DD}$ | $V_{DC}$ | 50 | 25℃ |
| Max Forward Gate Current | $I_{GMAX}$ | mA | 104 | 25℃ |
| Soldering Temperature | $T_S$ | ℃ | 245 | 30 seconds |

- **Note**

  1) Current Limit for long term, reliable operation

  2) Exceeding any one or a combination of the Absolute Maximum Rating conditions may cause permanent damage to the device. Extended application of Absolute Maximum Rating conditions to the device may reduce device reliability.

  3) Wavice does not recommend sustained operation above maximum operating conditions.

## Thermal Characteristics

| Parameter | Symbol | Unit | Value | Conditions |
|---|---|---|---|---|
| Thermal Resistance, Junction to Case (packaged)[1] | $R_{\theta JC}$ | ℃/W | 0.12 | $T_C$=85℃ |

- **Note**

  1) Measured for WG029034550I at $P_{DISS,\ av}$=876.06 W



Copyright © 2017- 2021 Wavice Inc. All rights reserved. The information in this document is subject to change without notice.



46, Samsung 1-ro 5-gil, Hwaseong-si, Gyeonggi-do, Korea(18449)
Tel : +82-31-260-8600, Fax : +82-31-260-8699, E-mail : sales@wavice.com

## Typical Performance

- Test Conditions : 25℃, Frequency : 2.9 ~ 3.4 GHz

| | 2.90GHz | 3.0GHz | 3.1GHz | 3.20GHz | 3.30GHz | 3.40GHz |
|---|---|---|---|---|---|---|
| Output Power [dBm] | 58 | 58 | 57.9 | 57.9 | 57.8 | 57.7 |
| Power Gain [dB] | 10 | 10 | 9.9 | 9.9 | 9.8 | 9.7 |
| Drain Efficiency [%] | 43 | 45 | 45 | 46 | 44 | 45 |

## DC Characteristics

- Test Conditions : 25℃

| | Sym | Units | Min | Typ | Max. | Conditions |
|---|---|---|---|---|---|---|
| Gate Threshold Voltage | $V_{TH}$ | V | -3.8 | -2.7 | -2 | $V_{DS}$= 10V, $I_D$=104.0mA |
| Drain-Source Breakdown Voltage | $V_{BD}$ | V | 150 | | | $V_{GS}$= -8V, $I_D$=104.0mA |
| Gate Forward Voltage | $V_{G-ON}$ | V | | 2 | | $I_{GS}$=104mA |

1) Scaled from PCM unit cell

## RF Characteristics

- Test Conditions : 25℃, Frequency : 2.9 ~ 3.4 GHz

| | Min | Typ. | Max | Units | Conditions |
|---|---|---|---|---|---|
| Small Signal Gain | 11 | | | dB | $V_{DD}$= 50V, $I_{DQ}$=800mA, $P_{IN}$=-5 dBm |
| Input Return Loss | | -7 | | dB | $V_{DD}$= 50V, $I_{DQ}$=800mA, $P_{IN}$=-5 dBm |
| Output Return Loss | | -5 | | dB | $V_{DD}$= 50V, $I_{DQ}$=800mA, $P_{IN}$=-5 dBm |
| Power Output | 57.4 | | | dBm | $V_{DD}$= 50V, $I_{DQ}$=20mA, $P_{IN}$=48 dBm |
| Drain Efficiency | 40 | 45 | | % | $V_{DD}$= 50V, $I_{DQ}$=20mA, $P_{IN}$=48 dBm |
| Power Gain | 9.4 | | | dB | $V_{DD}$= 50V, $I_{DQ}$=20mA, $P_{IN}$=48 dBm |



Copyright © 2017- 2021 Wavice Inc. All rights reserved. The information in this document is subject to change without notice.



46, Samsung 1-ro 5-gil, Hwaseong-si, Gyeonggi-do, Korea(18449)
Tel : +82-31-260-8600, Fax : +82-31-260-8699, E-mail : sales@wavice.com

## Typical S-Parameters

- VDD = 50V, IDQ = 1A, PIN = -5dBm

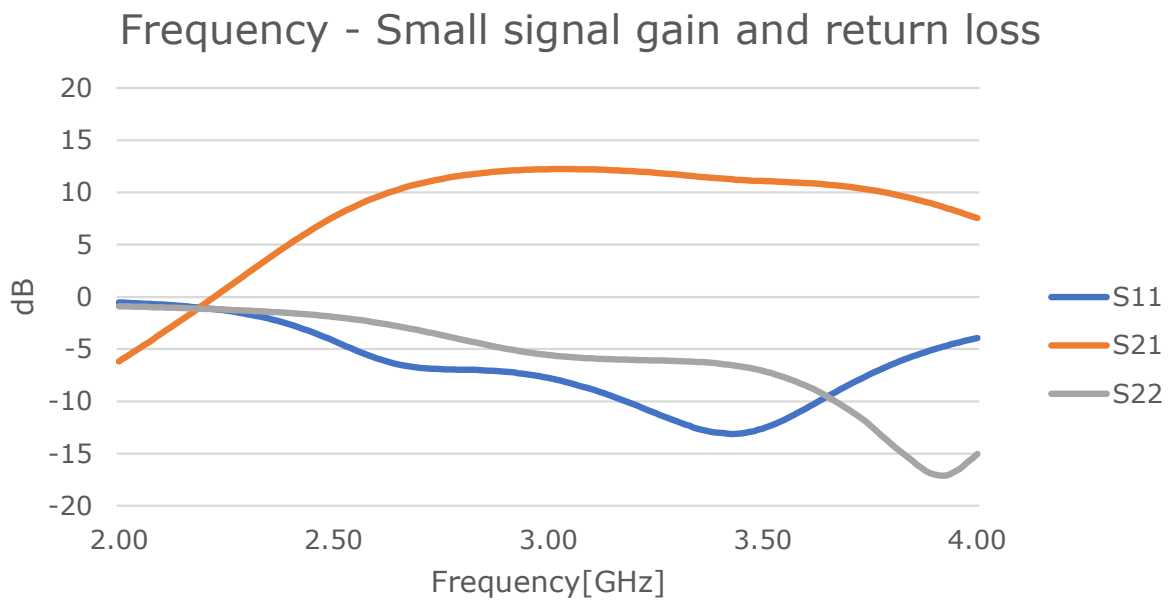


## Output Power[dBm] vs Input Power[dBm]

- VDD = 50V, Pulse Width = 300usec, Duty Cycle = 20%

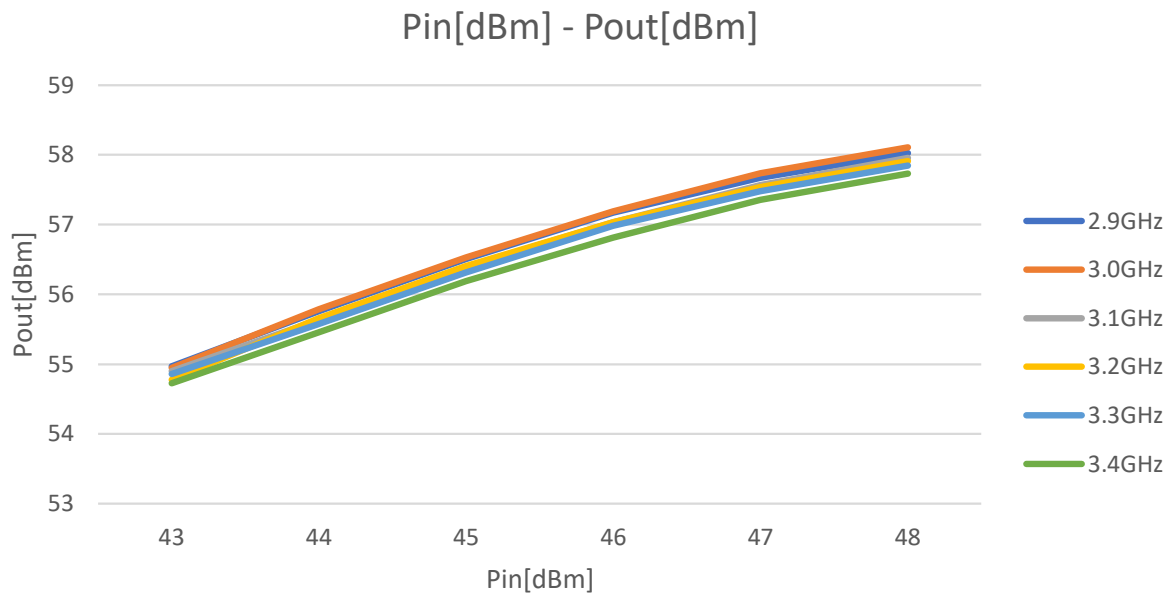


Rev. 1.5 (25-04-17)

Copyright © 2017- 2021 Wavice Inc. All rights reserved. The information in this document is subject to change without notice.



46, Samsung 1-ro 5-gil, Hwaseong-si, Gyeonggi-do, Korea(18449)
Tel : +82-31-260-8600, Fax : +82-31-260-8699, E-mail : sales@wavice.com

## Power Gain[dB] vs Input Power[dBm]

- VDD = 50V, Pulse Width = 300usec, Duty Cycle = 20%

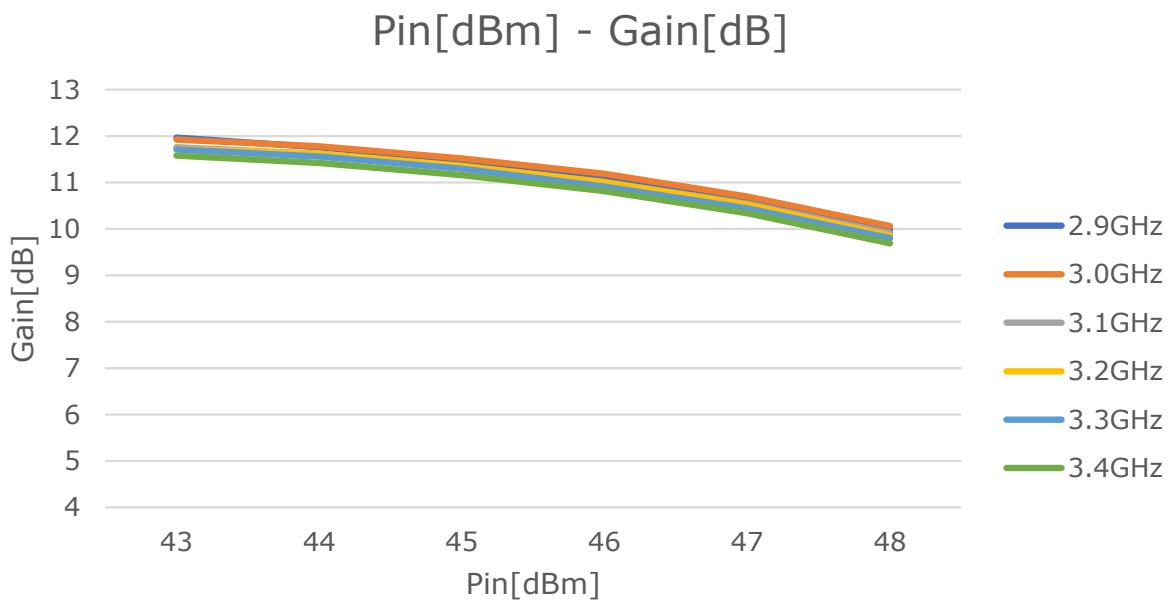


## Drain Efficiency[%] vs Input Power[dBm]

- VDD = 50V, Pulse Width = 300usec, Duty Cycle = 20%

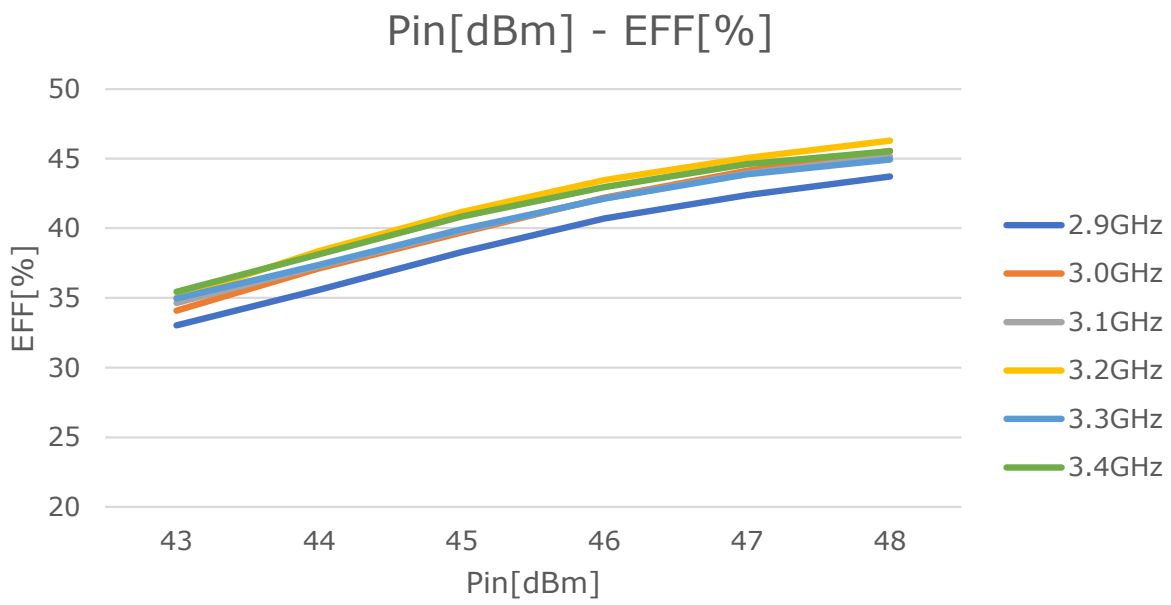




Copyright © 2017- 2021 Wavice Inc. All rights reserved. The information in this document is subject to change without notice.



46, Samsung 1-ro 5-gil, Hwaseong-si, Gyeonggi-do, Korea(18449)
Tel : +82-31-260-8600, Fax : +82-31-260-8699, E-mail : sales@wavice.com

## Evaluation Board

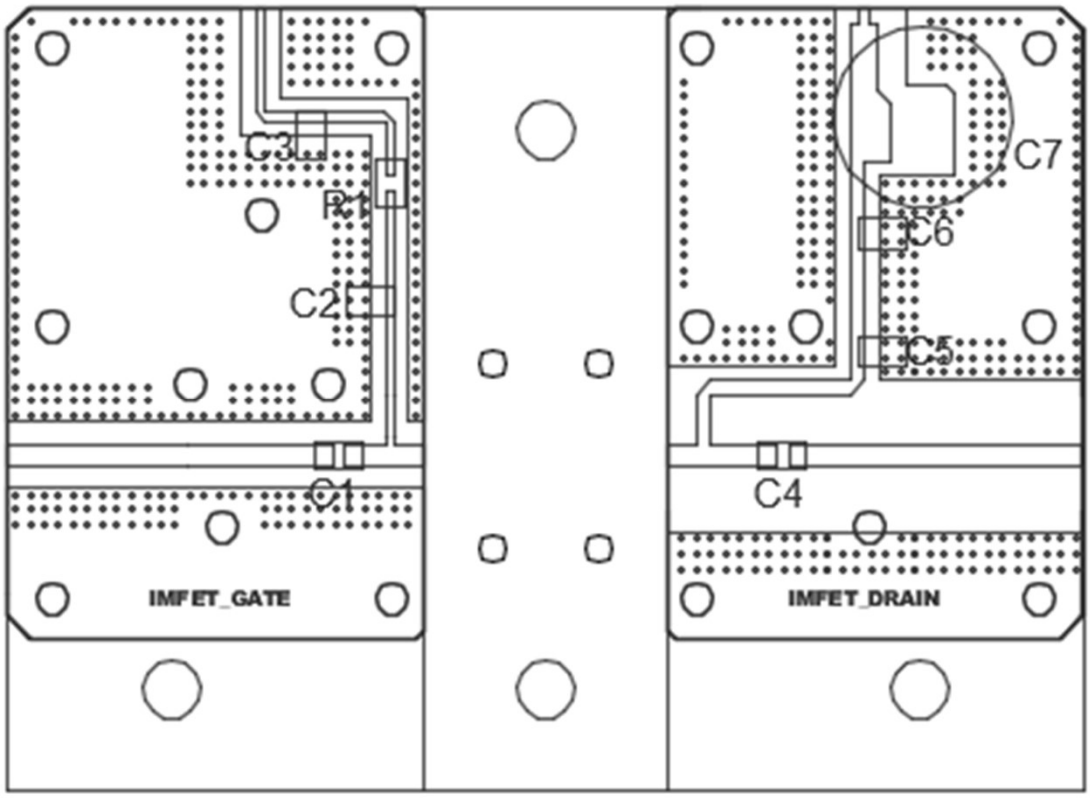


## Bill of Materials

| Designator | Part Name | Manufacturer | Qty |
|---|---|---|---|
| C1 | 800A0R8BT250XT | American technical ceramics | 1 |
| C2 | GRM1885C2A9R0DA01D | Murata Electronics | 1 |
| C3 | GRM1885C2A471JA01D | Murata Electronics | 1 |
| C4 | 800A5R6BT250XT | American technical ceramics | 1 |
| C5 | 800A100JT250XT4K | American technical ceramics | 1 |
| C6 | 800A101JT250XT4K | American technical ceramics | 1 |
| C7 | ECA-2AM331B | Panasonic | 1 |
| R1 | CR-03JL7---51R | VIKING | 1 |
| Amplifier | WG029034550I | Wavice | 1 |
| PCB | Taconic, TLY-3 20mil, 1oz | Taconic corporation | 1 |

Rev. 1.5 (25-04-17)

Copyright © 2017- 2021 Wavice Inc. All rights reserved. The information in this document is subject to change without notice.



46, Samsung 1-ro 5-gil, Hwaseong-si, Gyeonggi-do, Korea(18449)
Tel : +82-31-260-8600, Fax : +82-31-260-8699, E-mail : sales@wavice.com

## Application Circuit

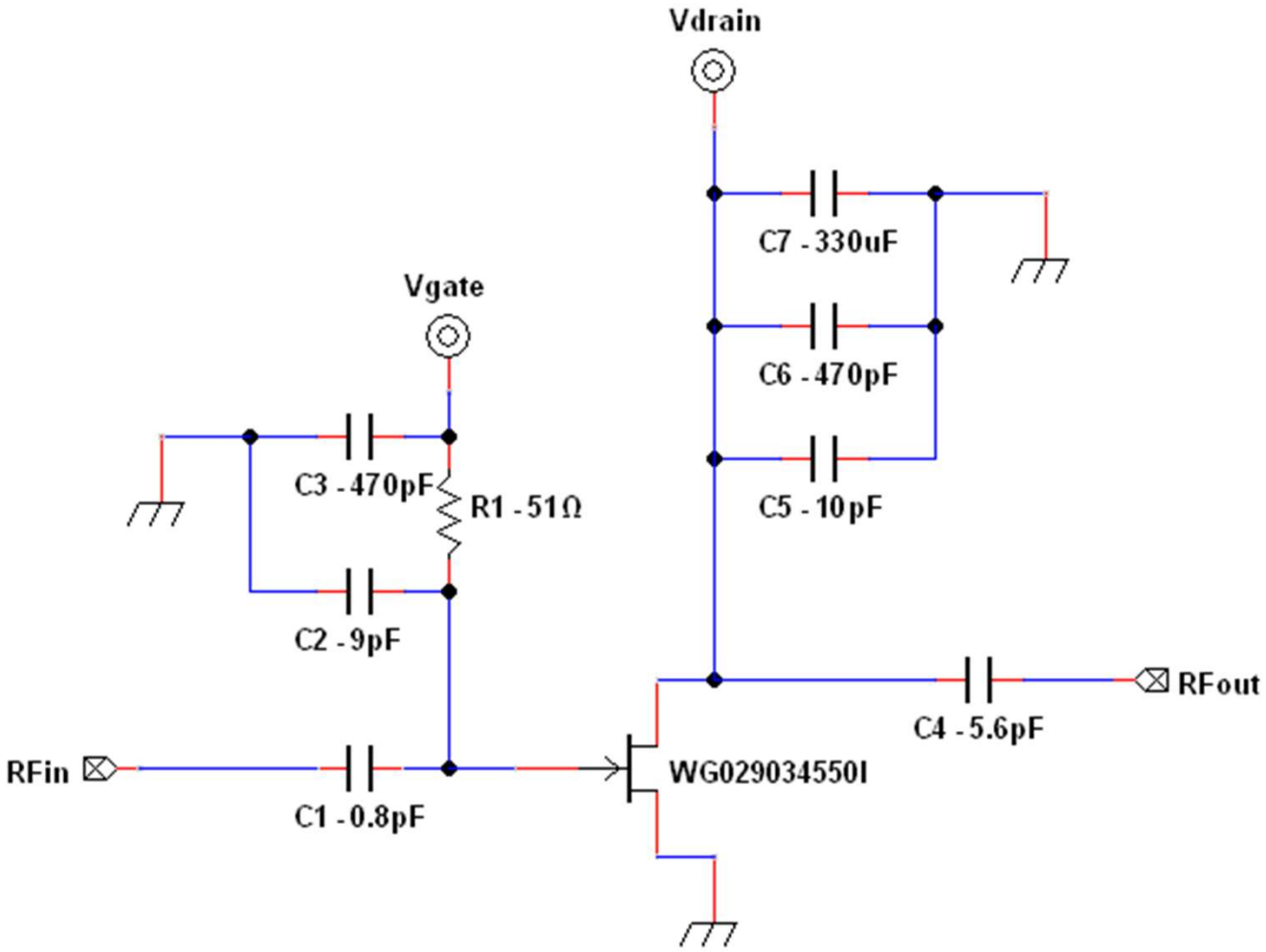




Copyright © 2017- 2021 Wavice Inc. All rights reserved. The information in this document is subject to change without notice.



46, Samsung 1-ro 5-gil, Hwaseong-si, Gyeonggi-do, Korea(18449)
Tel : +82-31-260-8600, Fax : +82-31-260-8699, E-mail : sales@wavice.com

## Product Dimensions

Notes:

1. All dimensions are in millimeters.
2. Dimension tolerances are ±0.20 mm for single-decimal dimensions (X.X) and ±0.15 mm for double-decimal dimensions (X.XX), unless otherwise noted.

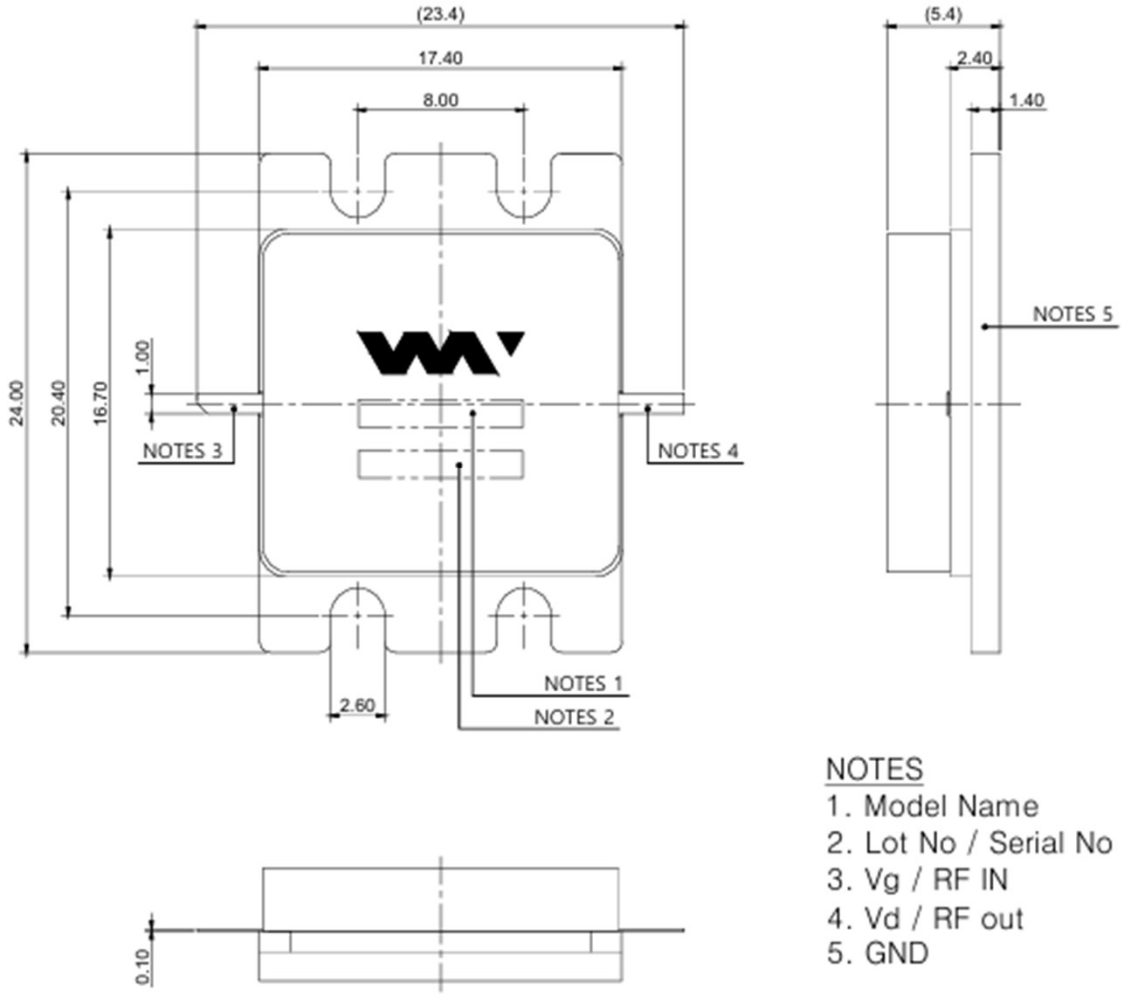




Copyright © 2017- 2021 Wavice Inc. All rights reserved. The information in this document is subject to change without notice.



46, Samsung 1-ro 5-gil, Hwaseong-si, Gyeonggi-do, Korea(18449)
Tel : +82-31-260-8600, Fax : +82-31-260-8699, E-mail : sales@wavice.com

## Naming Rule

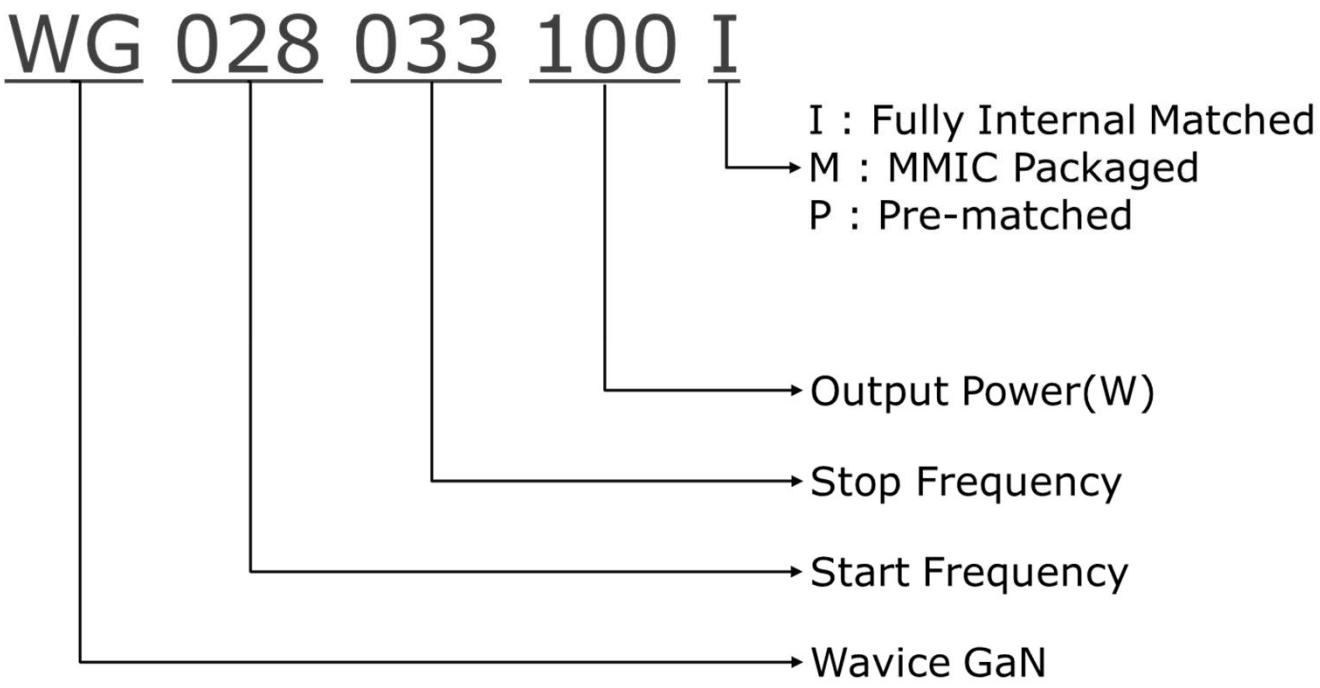


## Disclaimer

Specifications are subject to change without notice. Wavice Inc. believes the information contained within this data sheet to be accurate and reliable. However, no responsibility is assumed by Wavice for any infringement of patents or other rights of third parties which may result from its use. No license is granted by implication or otherwise under any patent or patent rights of Wavice. Wavice makes no warranty, representation or guarantee regarding the suitability of its products for any particular purpose. "Typical" parameters are the average values expected by Wavice in large quantities and are provided for information purposes only. These values can and do vary in different applications and actual performance can vary over time. Customers should obtain and verify the latest relevant information before placing orders for Wavice products. All operating parameters should be validated by customer's technical experts for each application.

Wavice products are not designed, intended or authorized for use as critical components in life-saving, or life-sustaining applications or other applications in which the failure of Wavice product could result in severe personal injury or death or in applications for planning, construction, maintenance or direct operation of a nuclear facility.



Copyright © 2017- 2021 Wavice Inc. All rights reserved. The information in this document is subject to change without notice.



46, Samsung 1-ro 5-gil, Hwaseong-si, Gyeonggi-do, Korea(18449)
Tel : +82-31-260-8600, Fax : +82-31-260-8699, E-mail : sales@wavice.com