WRM27002900P400W01

2.7 – 2.9GHz 400W GaN Amplifier

Features

- Frequency Range : 2.7 – 2.9GHz
- Psat : 55.0 dBm
- Power Gain : 16dB @Psat
- Small Signal Gain : 19dB
- DE : 50% @Psat
- Bias : V_D = 50V, I_{DQ} = 20mA, V_G = -2.5V (Typ.)
- Characterized at Pulse duty 20%, Pulse width 200µs

Description

Wavice's WRM27002900P400W01 is a high power, S-Band amplifier fabricated on Wavice's Durable 0.3um GaN on SiC process. Covering the frequency range of 2.7 to 2.9GHz, the WRM27002900P400W01 typically provides 55.0 dBm of saturated output power and 16 dB of power gain while achieving 50% Drain efficiency.
The WRM27002900P400W01 is ideal for use in both commercial and military radar systems.

ROHS compliant.

Applications

- Military Radar
- Commercial Radar
- Infra Structure
- Small Cell

Ordering information

Part No.	Description
WVI29315F50A	
WRM27002900P400W01	WRM27002900P400W01 Evaluation Board

WRM27002900P400W01

2.7 – 2.9GHz 400W GaN Amplifier

Absolute Maximum Ratings

Parameter	Symbol	Value / Range
Drain Source Voltage	V_{DS}	150 V
Gate Source Voltage	V_{GS}	-10 to +2 V
Maximum Forward Gate Current	I_{GMAX}	42 mA
Absolute Maximum Channel Temperature	T_{CH}	+250 ℃
Storage Temperature	T_{STG}	-65 ℃ to +150 ℃
Mounting Temperature		245 ℃ / 30 sec

1) Case temperature T_C =25 ℃
2) Wavice does not recommend sustained operation above maximum operating conditions.
3) Exceeding any one or a combination of the Absolute Maximum Rating conditions may cause permanent damage to the device. Extended application of Absolute Maximum Rating conditions to the device may reduce device reliability.

Recommended Operating Conditions

Parameter	Symbol	Value / Range
Drain Source Voltage	V_{DS}	48 - 52 V
Drain Current	I_{DQ}	20 mA
Gate Source Voltage (Typical)	V_{GS}	-2.5 V
Case Operating Temperature		~40 ℃ to +85 ℃

1) Electrical specifications are measured at specified test conditions. Specifications are not guaranteed over all recommended operating conditions.
2) Proper ESD(electrostatic discharge) control techniques should be used when handling these devices.

Thermal Characteristics

Parameter	Symbol	Units	Value	Test Conditions
Thermal Resistance using Infrared Measurement of Die Surface Temperature	R_{θ}(IR)	℃/W	TBD	Tbase = 85°C, V_D = 50V, I_{DQ} = 20mA, Freq = 2.7 – 2.9GHz
Peak IR Surface Temperature	T_{CH}	℃	TBD	

1) Thermal resistance determined to the case temperature (85 ℃)
2) Channel temperature indicated is an IR scan equivalent temperature, Thermal resistance is calculated using this value.

WRM27002900P400W01

2.7 – 2.9GHz 400W GaN Amplifier

Electrical Specifications

Parameter	Units	Min	Typ	Max
Saturated Output Power [1)]	dBm	55		
Drain Efficiency	%	50		
Power Gain	dB	16		
Small Signal Gain	dB		19	
Input Return Loss	dB		-10	
Output Return Loss	dB		-6	

Test conditions, unless otherwise noted :

- T_A = 25 °C, V_D = 50V, I_{DQ} = 20mA, V_G = -2.5V (Typ.)
- Test Frequency : 2.7 – 2.9 GHz
- Measured in WRM27002900P400W01 Evaluation Board

1) Characterized at Pulse duty 20%, Pulse width 200µs

Parameter	Units	Min	Typ	Max	Test Conditions
Gate Threshold Voltage	V	-3.4	-2.7	-2.0	V_{DS}= 10V, I_D= 42 mA
Drain-Source Breakdown Voltage	V	150			V_{GS}= -8V, I_D= 42 mA
Drain Current(I_{DMAX})[1)]	A	35.7	40.3		V_{DS}= 10V, V_{GS}= 2.0V
Gate Forward Voltage	V		2		I_{GS}= 42 mA

Test conditions, unless otherwise noted :

1) Scaled from PCM unit cell

WRM27002900P400W01

2.7 – 2.9GHz 400W GaN Amplifier

Performance Plots | S-Parameter

Test conditions, unless otherwise noted: T = +25 °C, V_D = 50V, I_{DQ} = 800mA

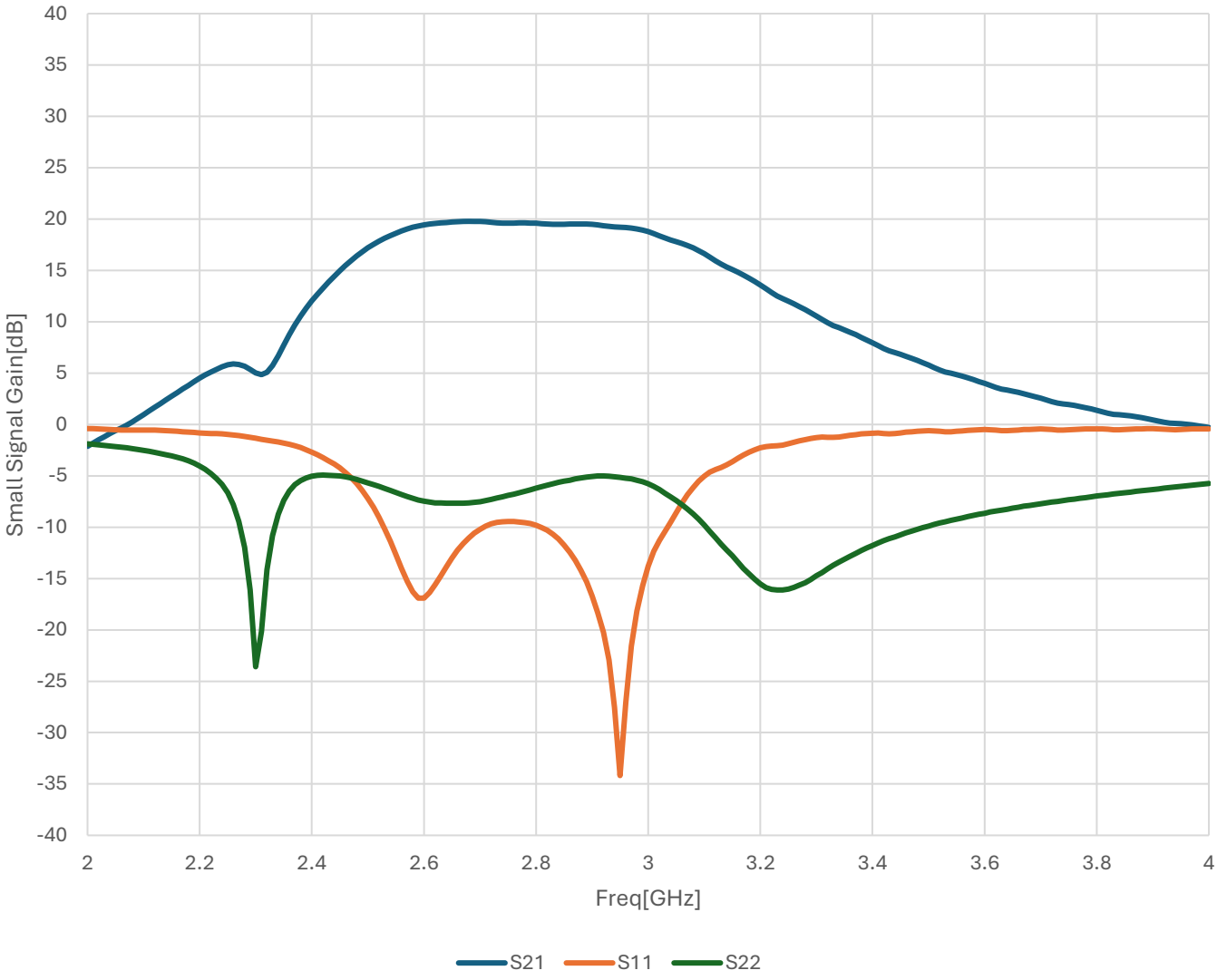

WRM27002900P400W01

2.7 – 2.9GHz 400W GaN Amplifier

Performance Plots | Output Power vs Input Power

Test conditions, unless otherwise noted: T = +25 °C, V_D = 50V, I_{DQ} = 20mA, Pulse width 200µs, Duty Cycle = 20%

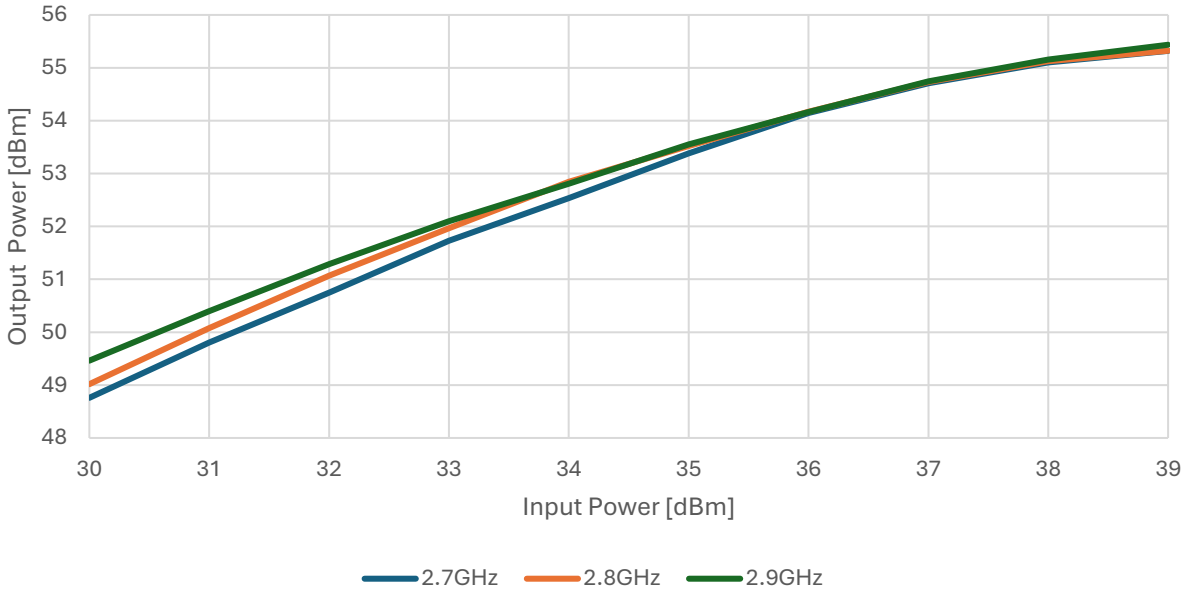

Performance Plots | Power Gain vs Input Power

Test conditions, unless otherwise noted: T = +25 °C, V_D = 50V, I_{DQ} = 20mA, Pulse width 200µs, Duty Cycle = 20%

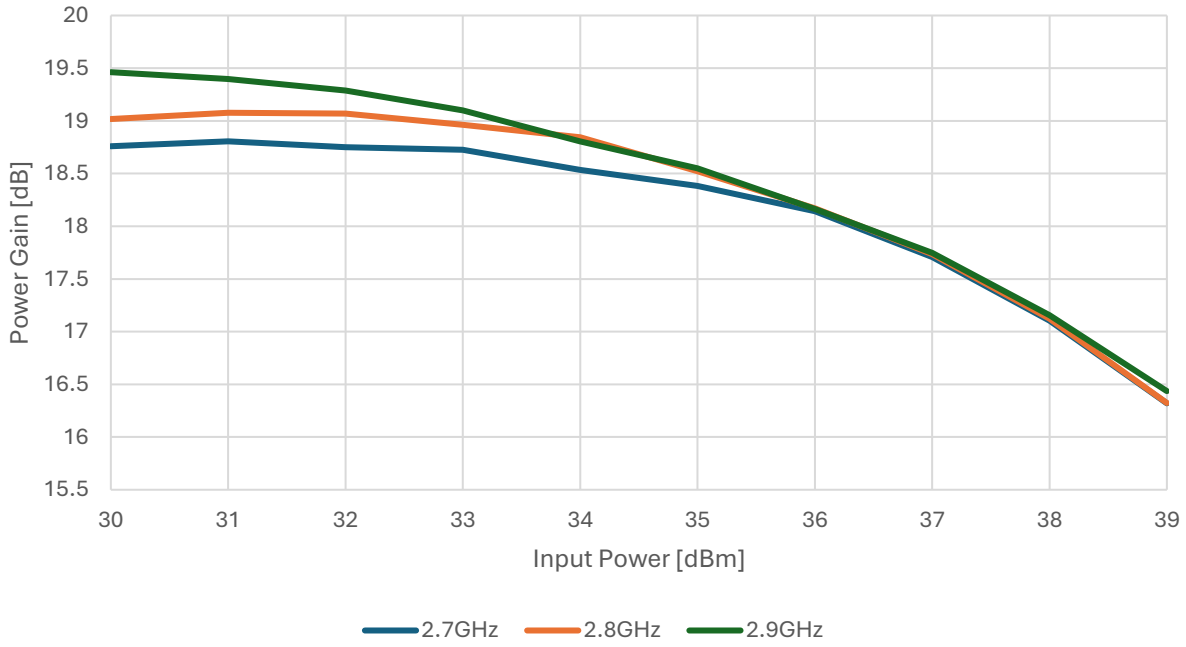

WRM27002900P400W01

2.7 – 2.9GHz 400W GaN Amplifier

Performance Plots | DE vs Input Power

Test conditions, unless otherwise noted: T = +25 °C, V_D = 50V, I_{DQ} = 20mA, Pulse width 200µs, Duty Cycle = 20%

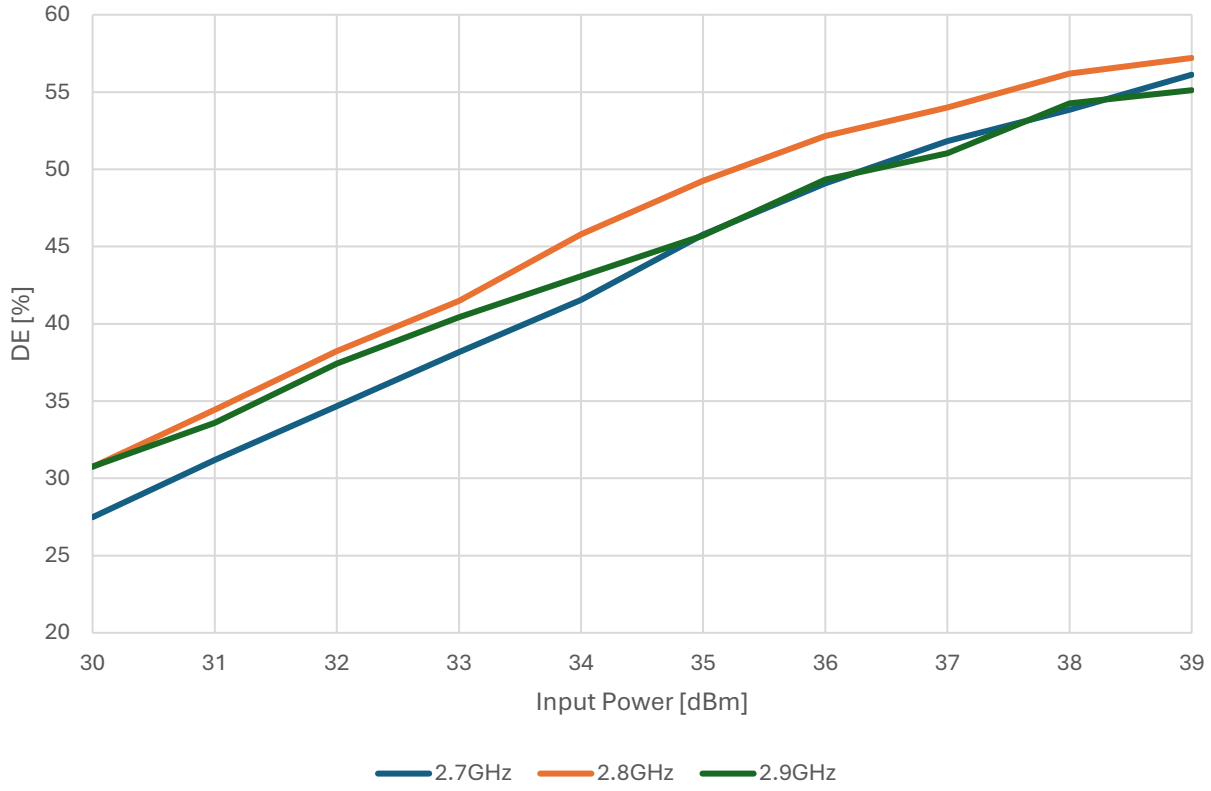

WRM27002900P400W01

2.7 – 2.9GHz 400W GaN Amplifier

Evaluation Board

Notes:

1. Evaluation Board Size 56 X 33.1 [mm]

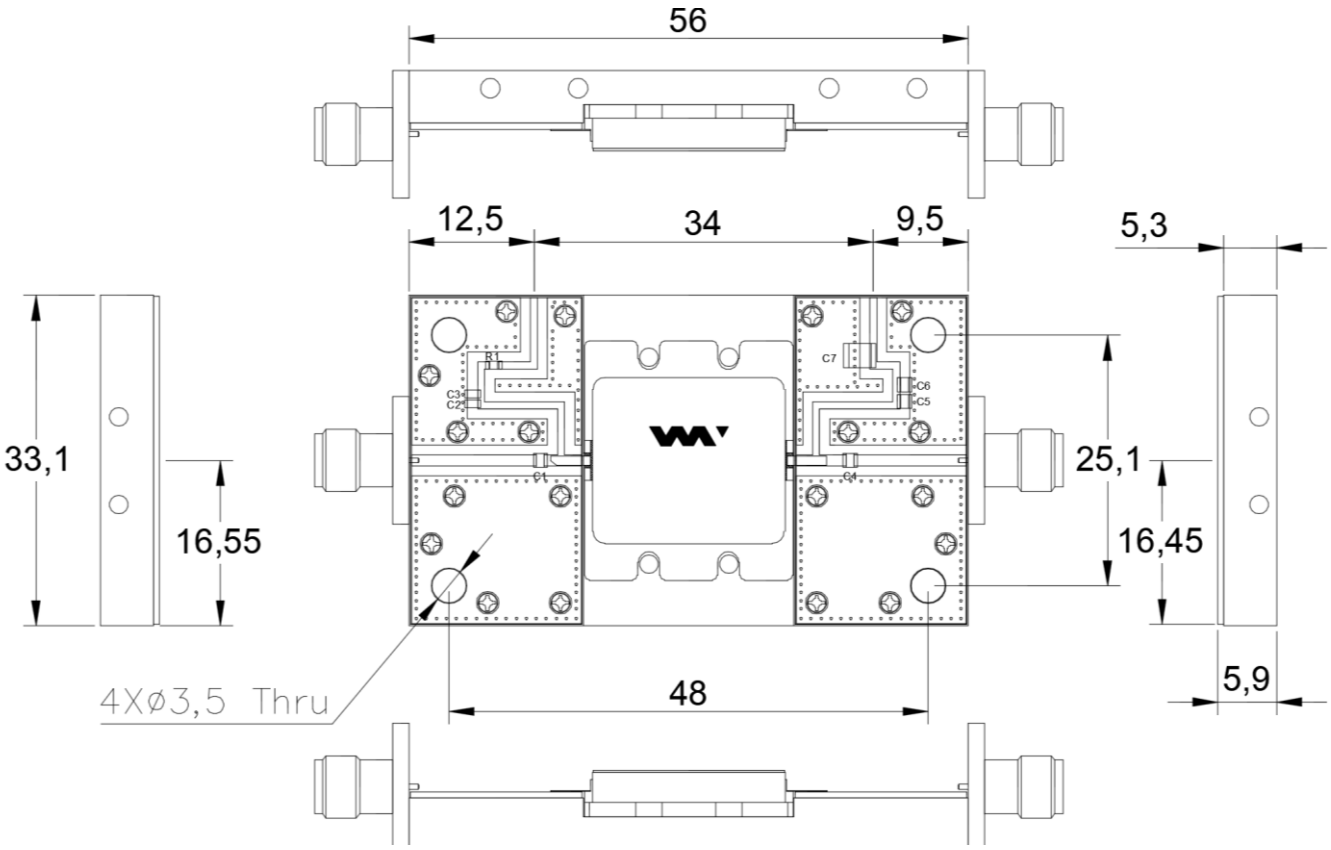

Bill of Materials

Reference Designator	Value	Description
C1	0.7pF	800A0R7BT250XT
C2	10pF	GRM1885C2A100JA01D
C3	100pF	GRM1885C2A101JA01D
C4	10pF	800A100JT250XT
C5	10pF	800A100JT250XT
C6	100pF	800A101JT250XT
C7	10uF	GRM32EC72A106KE05L
R1	51Ω	CR-03JL7---51R
U1		WVI29315F50A
PCB Information	RO4350B, 20Mil, 1oz	

WRM27002900P400W01

2.7 – 2.9GHz 400W GaN Amplifier

Applications Information

Notes:

1. Evaluation Board Schematic

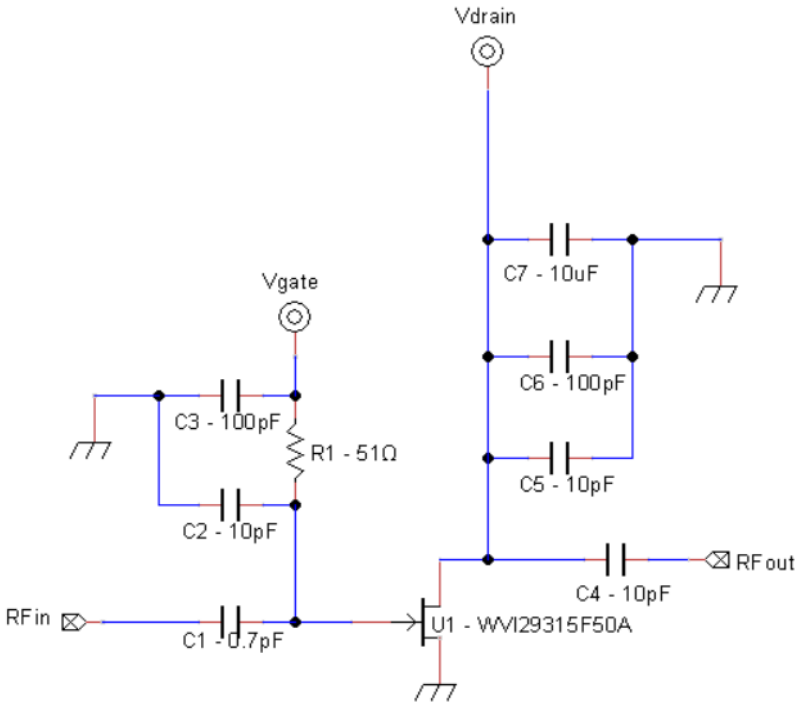

Bias-Up & Down Procedure

Procedure	Description
Bias-Up	1. Set I_D limit to 5000 mA, I_G limit to 20 mA
	2. Set V_G to −4.0 V
	3. Set V_D +50 V
	4. Adjust V_G more positive until I_{DQ}
	5. Apply RF signal
Bias-Down	1. Turn off RF signal
	2. Reduce V_G to −4.0 V. Ensure I_{DQ} ~ 0 mA
	3. Set V_D to 0
	4. Turn off V_D supply
	5. Turn off V_G supply

WRM27002900P400W01

2.7 – 2.9GHz 400W GaN Amplifier

Handling Precautions

Parameter	Class	Test Methodology
ESD – Human Body Model (HBM)	Class 1B	JEDEC JESD22 A114-D
ESD – Charged Device Model (CDM)	Class IV	JEDEC JESD22 C101-C
MSL – Moisture Sensitivity Level	N/A	IPC/JEDEC Standard J-STD-020

Solderability

The component leads should be manually soldered, and the package cannot be subjected to conventional reflow processes. The use of no-clean solder to avoid washing after soldering is recommended.

Contact Information

- Web : www.wavice.com
- Tel : +82-31-260-8600
- Email : sales@wavice.com

Notes & Disclaimer

Specifications are subject to change without notice. Wavice Inc. believes the information contained within this data sheet to be accurate and reliable. However, no responsibility is assumed by Wavice for any infringement of patents or other rights of third parties which may result from its use. No license is granted by implication or otherwise under any patent or patent rights of Wavice. Wavice makes no warranty, representation or guarantee regarding the suitability of its products for any particular purpose.
"Typical" parameters are the average values expected by Wavice in large quantities and are provided for information purposes only. These values can and do vary in different applications and actual performance can vary over time. Customers should obtain and verify the latest relevant information before placing orders for Wavice products. All operating parameters should be validated by customer's technical experts for each application.
Wavice products are not designed, intended or authorized for use as critical components in life-saving, or life-sustaining applications or other applications in which the failure of Wavice product could result in severe personal injury or death or in applications for planning, construction, maintenance or direct operation of a nuclear facility.

Copyright © 2017- 2025 Wavice Inc. All rights reserved. The information in this document is subject to change without notice.